Electronic Filing - Received, Clerk's Office : 07/17/2014

Illinois Pollution Control Board
R2014-10

T. Barkley: Exhibit I

FINAL REPORT
ROUND 10 DAM ASSESSMENT
AMEREN ENERGY GENERATING COMPANY – HUTSONVILLE POWER STATION
POND A, POND B, POND D
HUTSONVILLE, ILLINOIS

PREPARED FOR:

U.S. Environmental Protection Agency
1200 Pennsylvania Avenue, NW
Washington, DC 20460

PREPARED BY:

GZA GeoEnvironmental, Inc.
One Edgewater Drive
Norwood, Ma 02062
GZA File No. 01.0170142.30

GZA
GeoEnvironmental, Inc.

Engineers and
Scientists

One Edgewater Drive
Norwood,
Massachusetts 02062
Phone: 781-278-3700
Fax: 781-278-5701
http://www.gza.com

October 16, 2012
GZA File No. 170142.30

Mr. Stephen Hoffman
U.S. Environmental Protection Agency
1200 Pennsylvania Avenue, NW
Washington, DC 20460

RE: Assessment of Dam Safety of Coal Combustion Surface Impoundments at the Hutsonville Power Station

Dear Mr. Hoffman,

In accordance with our proposal 01.P0000177.11 dated March 28, 2011, and U.S. Environmental Protection Agency (EPA) Contract No. EP10W001313, Order No. EP-B115-00049, GZA GeoEnvironmental, Inc. (GZA) has completed our visual assessment of the AmerenEnergy Generating Company, Hutsonville Power Station Coal Combustion Waste (CCW) Impoundments located in Hutsonville, Illinois. The site visit was conducted on June 2, 2011. The purpose of our efforts was to provide the EPA with a site specific assessment of the impoundments to assist EPA in assessing the structural stability of the impoundments under the authority of the Comprehensive Environmental Response, Compensation, and Liability Act (CERCLA) Section 104(e). We are submitting one hard copy and one CD-ROM copy of this Final Report directly to the EPA.

Based on our visual assessment, and in accordance with the EPA's criteria Pond A, Pond B and Pond D are currently in **POOR** in our opinion. Further discussion of our evaluation and recommended actions are presented in the Task 3 Dam Assessment Report. The report includes: (a) a completed Coal Combustion Dam Inspection Checklist Form for each Pond; (b) a field sketch; and (c) selected photographs with captions. Our services and report are subject to the Limitations found in **Appendix A** and the Terms and Conditions of our contract agreement.

We are happy to have been able to assist you with this visual assessment and appreciate the opportunity to continue to provide you with dam engineering consulting services. Please contact the undersigned if you have any questions or comments regarding the content of this Task 3 Dam Assessment Report.

Sincerely,

GZA GeoEnvironmental, Inc.

Doug P. Simon, P.E (WI)
Geologic Engineer
doug.simon@gza.com

Patrick J. Harrison, P.E.
Senior Geotechnical Consultant
patrick.harrison@gza.com

James P. Guarente

James P. Guarente, P.E. (MA)
Consultant Reviewer
james.guarente@gza.com

PREFACE

The assessment of the general condition of the dams/impoundment structures reported herein was based upon available data and visual inspections. Detailed investigations and analyses involving topographic mapping, subsurface investigations, testing and detailed computational evaluations were beyond the scope of this report.

In reviewing this report, it should be realized that the reported condition of the dams and/or impoundment structures was based on observations of field conditions at the time of inspection, along with data available to the inspection team. In cases where an impoundment is lowered or drained prior to inspection, such action, while improving the stability and safety of the dam, removes the normal load on the structure and may obscure certain conditions, which might otherwise be detectable if inspected under the normal operating environment of the structure.

It is critical to note that the condition of the dam and/or impoundment structures depends on numerous and constantly changing internal and external conditions, and is evolutionary in nature. It would be incorrect to assume that the reported condition of the dam will continue to represent the condition of the dam at some point in the future. Only through continued care and inspection can there be any chance that unsafe conditions be detected.

Prepared by:

GZA GeoEnvironmental, Inc.

PATRICK J. HARRISON
062.034946
LICENSED PROFESSIONAL ENGINEER
STATE OF ILLINOIS

Patrick Harrison, P.E.

License No.: 062.034946
Senior Geotechnical Consultant
GZA GeoEnvironmental, Inc.

EXECUTIVE SUMMARY

This Assessment Report presents the results of a visual assessment of the AmerenEnergy Generating Company (Ameren) – Hutsonville Power Station (HPS) Coal Combustion Waste (CCW) Impoundments located at 15142 East 1900th Avenue, Hutsonville, Illinois. These assessments were performed on June 2, 2011 by representatives of GZA GeoEnvironmental, Inc (GZA), accompanied by representatives of Ameren.

The HPS power plant has two coal-fired units with a maximum generating capacity of approximately 150 Megawatts. Commercial operation of the facility began in the 1940s and an earthen embankment CCW Impoundment (Pond D) was commissioned at that time. Subsequently, Pond A was commissioned in 1986 and Ponds B and C were commissioned in 2000. The impoundments were constructed for the purpose of storing and disposing non-recyclable CCW from the HPS facility and clarification of water prior to discharge. A portion of Pond D has since been permanently closed and capped as a landfill.

Pond A receives fly ash from the facility via a sluice transport pipe. Solids are allowed to settle and water is discharged from Pond A into Pond B. Pond B receives fly ash from Pond A and bottom ash from Pond C. Pond C receives bottom ash from the active portion of Pond D and stormwater runoff from the closed portion of Pond D. The active portion of Pond D receives bottom ash from the facility and also receives the water from various drains and treatment systems. Based on discussions with the EPA, analysis of the fully incised Pond C and the closed portion of Pond D were judged not to fall within our scope of work as the units do not meet the criteria set forth by the U.S. EPA for further evaluation.

For the purposes of this EPA-mandated assessment, the size of the impoundments was based on U. S. Army Corps of Engineers (COE) criteria. Based on the maximum crest height of 22 feet and a storage volume of approximately 250 acre-feet, Pond A is classified as a **Small**-sized structure. Based on the maximum crest height of 17 feet and a storage volume of approximately 70 acre-feet, Pond B is classified as a **Small**-sized structure. Based on the maximum crest height of 15 feet and a storage volume of approximately 6 acre-feet, Pond D is classified as a **Small**-sized structure. According to guidelines established by the COE, dams with a storage volume less than 1,000 acre-feet and/or a height less than 40 feet are classified as Small-sized structures. Note per the Illinois Administrative code, Pond A qualifies as a Class III dam while Ponds B and D do not qualify as dams.

In GZA's opinion, Pond A, Pond B and Pond D are **Low** Hazard structures as classified under the Environmental Protection Agency (EPA) hazard rating criteria due to their small size, the fact that no loss of life would be expected if there was a failure and the low potential for environmental impacts outside of Utility-owned property. Pond A is considered a Class III dam per Illinois Administrative Code. Similar to the EPA classification system for a **LOW** hazard structure, a dam is considered Class III when failure has a low probability for causing loss of life or substantial economic loss.

In general, the overall condition of the Pond A was judged to be **POOR** and was found to have the following deficiencies:

1. Animal burrows along the crest;
2. Minor sloughing on the downstream slope;
3. No documented hydrologic/hydraulic analysis; and,
4. Conditions leading to inadequate freeboard.

In general, the overall condition of Pond B was judged to be **POOR** and was found to have the following deficiencies:

1. No documented stability analysis.

In general, the overall condition of the Pond D was judged to be **POOR** and was found to have the following deficiencies:

1. The calculated factor of safety under seismic loading was less than the generally accepted value 1.0.

Please note that access to the downstream slope of Pond D along the Wabash River was limited and additional deficiencies may or may not be present along the slope. The following sections describe the recommended approach to address current deficiencies. Prior to undertaking recommended maintenance, repairs, or remedial measures, the applicability of permits needs to be determined for activities that may occur within the jurisdiction of the appropriate regulatory agencies.

Studies and Analyses

GZA recommends the following studies and analyses:

1. Perform a stability analysis of the slopes of Pond B; and,

2. Perform a hydrologic/hydraulic analysis on Pond A to establish the maximum allowable water elevation.

3. Perform seismic stability analysis of the Pond D embankment.

Recurrent Operation & Maintenance Recommendations

GZA recommends the following operation and maintenance level activities:

1. Repair sloughing on the downstream slope of Pond A;

2. Fill currently observed animal burrows by injecting grout under low to moderate pressures to ensure the entire limits of the respective burrow is adequately filled;

3. Exercise stoplogs and slide gates; and,

4. Increase frequency of maintenance mowing such that overgrowth of vegetation is minimized.

5. Develop an Emergency Action Plan for the impoundments.

Remedial Measures Recommendations

1. In conjunction with the results of the hydrologic and hydraulic analyses, make provisions for an emergency overflow spillway(s) if appropriate; and

2. In conjunction with the results of the stability analyses, make provisions to address deficiencies if/as necessary.

3. In conjunction with the results of the seismic stability analysis, take measures to increase the factor of safety of the embankment for Pond D under seismic loading to at least 1.0 as appropriate.

POND A, POND B AND POND D
AMERENENERGY GENERATING COMPANY, HUTSONVILLE POWER STATION
HUTSONVILLE, ILLINOIS

TABLE OF CONTENTS

1.0 DESCRIPTION OF PROJECT 1

1.1 General 1
  1.1.1 Authority 1
  1.1.2 Purpose of Work 1
  1.1.3 Definitions 1
1.2 Description of Project 1
  1.2.1 Location 1
  1.2.2 Owner/Caretaker 2
  1.2.3 Purpose of the Impoundments 2
  1.2.4 Description of Pond A and Appurtenances 3
  1.2.5 Description of Pond B Impoundment and Appurtenances 3
  1.2.6 Description of the Pond D Impoundment and Appurtenances 4
  1.2.7 Operations and Maintenance 5
  1.2.8 Size Classification 5
  1.2.9 Hazard Potential Classification 5
1.3 Pertinent Engineering Data 6
  1.3.1 Drainage Area 6
  1.3.2 Reservoir 6
  1.3.3 Discharges at the Impoundment Sites 6
  1.3.4 General Elevations (feet – MSL) 6
  1.3.5 Design and Construction Records and History 7
  1.3.6 Operating Records 7
  1.3.7 Previous Inspection Reports 7

2.0 ASSESSMENT 7

2.1 Visual Assessment 7
  2.1.1 Pond A General Findings 8
  2.1.2 Pond A Upstream Slope (Photos 1 through 10) 8
  2.1.3 Pond A Top of Impoundment (Photos 1 through 10) 8
  2.1.4 Pond A Downstream Slope (Photos 11 through 19) 8
  2.1.5 Pond A Discharge Pipes (Photos 20 through 22) 8
  2.1.6 Pond B General Findings 9
  2.1.7 Pond B Upstream Slope (Photos 23 through 29) 9
  2.1.8 Pond B Top of Impoundment (Photos 25 through 27) 9
  2.1.9 Pond B Downstream Slope (Photos 30 through 34) 9
  2.1.10 Pond B Discharge Pipes (Photos 35 through 38) 9
  2.1.11 Pond D General Findings 9
  2.1.12 Pond D Upstream Slope (Photos 44 through 51) 10
  2.1.13 Pond D Top of Impoundment (Photos 42, 45 through 48) 10
  2.1.14 Pond D Downstream Slope 10
  2.1.15 Pond D Discharge Pipes (Photos 44, 45, 46, 49, 52 through 56) 10
2.2 Caretaker Interview 10
2.3 Operation and Maintenance Procedures 10
2.4 Emergency Action Plan 11
2.5 Hydrologic/Hydraulic Data 11
2.6 Structural and Seepage Stability 11

POND A, POND B AND POND D
AMERENENERGY GENERATING COMPANY, HUTSONVILLE POWER STATION
HUTSONVILLE, ILLINOIS

TABLE OF CONTENTS (CONT'D)

3.0 ASSESSMENTS AND RECOMMENDATIONS 11

3.1 Assessments 11
3.2 Studies and Analyses 12
3.3 Recurrent Operations and Maintenance Recommendations 12
3.4 Remedial Measures Recommendations 12
3.5 Alternatives 13

4.0 ENGINEER'S CERTIFICATION 13

FIGURES

Figure 1 Site Location Map
Figure 2 Overall Ash Basin Plan
Figure 3 Pond A and Pond B
Figure 4 Pond A Plan of Design
Figure 5 Pond A Typical Cross Sections
Figure 6 Pond A Additional Sections
Figure 7 Pond A Additional Details
Figure 8 Monitoring Well Locations
Figure 9 Pond B and Pond C Plan of Design
Figure 10 Pond B and Pond C Typical Sections
Figure 11 Pond B Decant Structure Details
Figure 12 Pond B and Pond C Pump Station Plan, Section & Details
Figure 13 Pond D (Active Portion)

APPENDICES

Appendix A Limitations
Appendix B Definitions
Appendix C Inspection Checklists
Appendix D References
Appendix E Previous Inspection Reports
Appendix F Photographs

1.0 DESCRIPTION OF PROJECT

1.1 General

1.1.1 Authority

The United States Environmental Protection Agency (EPA) has retained GZA GeoEnvironmental, Inc. (GZA) to perform a visual assessment and develop a report of conditions for the AmerenEnergy Generating Company (Ameren, Owner) Hutsonville Power Station (HPS, Site) Coal Combustion Waste (CCW) Impoundments in Crawford County, Illinois. This assessment was authorized by the EPA under the authority of the Comprehensive Environmental Response, Compensation and Liability Act (CERCLA), Section 104(e). This assessment and report were performed in accordance with Request for Quote (RFQ) RFQ-DC-16, dated March 16, 2011, and EPA Contract No. EP10W001313, Order No. EP-B11S-00049. The assessment generally conformed to the requirements of the Federal Guidelines for Dam Safety[1] and this report is subject to the limitations provided in **Appendix A** and the Terms and Conditions of our Contract Agreement.

1.1.2 Purpose of Work

The purpose of this investigation was to visually inspect and evaluate the condition of the impoundments and appurtenant structures (the management unit[s]) to attempt to identify conditions that may adversely affect their structural stability and functionality, to note the extent of any deterioration that may be observed, review the status of maintenance and needed repairs and to evaluate the conformity with current design and construction standards of care.

The investigation was divided into five parts: 1) obtain and review available reports, investigations and data from the Owner pertaining to the impoundment and appurtenant structures; 2) perform a review with the Owner of available design, assessment and maintenance data and procedures for the management unit; 3) perform a visual assessment of the Site; 4) prepare and submit a field assessment checklist; and 5) prepare and submit a draft and final report presenting the evaluation of the structure, including recommendations and proposed remedial actions.

1.1.3 Definitions

To provide the reader with a better understanding of the report, definitions of commonly used terms associated with dams are provided in **Appendix B**. Many of these terms may be included in this report. The terms are presented under common categories associated with dams, which include: 1) orientation; 2) dam components; 3) size classification; 4) hazard classification; 5) general; and 6) condition rating.

1.2 Description of Project

1.2.1 Location

The HPS is located approximately one mile north of the City of Hutsonville in Crawford County, Illinois. The entrance to the Site is on East 1900th Avenue and the CCW

---

[1] FEMA/ICODS, April 2004: http://www.ferc.gov/industries/hydropower/safety/guidelines/fema-93.pdf.

impoundments are located about ¼-mile south and southwest of the power plant at approximately latitude 39˚ 07' 50" North and longitude 87˚ 39' 38" West. A Site locus of the impoundments and surrounding area is shown on **Figure 1**. An aerial photograph of the impoundments and surrounding area is provided as **Figure 2**. The impoundments can be accessed by vehicles from earthen access roads from the power plant.

1.2.2 Owner/Caretaker

The CCW impoundments are owned by Ameren and are operated by the HPS.

	Dam Owner/Caretaker
Name	AmerenEnergy Generating Company, Hutsonville Power Station
Mailing Address	15142 East 1900th Avenue
City, State, Zip	Hutsonville, Illinois 62433
Contact	Gregory Musch
Title	Product Superintendent
E-Mail	GMusch@ameren.com
Daytime Phone	618-563-1352
Emergency Phone	911

1.2.3 Purpose of the Impoundments

The HPS power plant has two coal-fired units with a maximum generating capacity of approximately 150 Megawatts. Commercial operation of the facility began in the 1940s and an earthen embankment CCW Impoundment (Pond D) was commissioned at that time. Subsequently, Pond A was commissioned in 1986 and Ponds B and C were commissioned in 2000. The impoundments were constructed for the purpose of storing and disposing non-recyclable CCW from the HPS facility and clarification of water prior to discharge. A portion of Pond D as shown in Figure 2 has been permanently closed and capped as a landfill.

Pond A receives fly ash from the facility via a sluice transport pipe. Solids are allowed to settle and water is discharged from Pond A into Pond B. Pond B receives fly ash from Pond A and bottom ash from Pond C. Pond C receives bottom ash from the active portion of Pond D and stormwater runoff from the closed portion of Pond D. The active portion of Pond D receives bottom ash from the facility and also receives the water from various drains and treatment systems.

During our Site visit, GZA observed the condition of Pond C and the closed portion of Pond D and subsequently completed the EPA checklists. However, after further discussion with the EPA, analysis of these structures does not fall within our scope of work as the units do not meet the criteria set forth by the U.S. EPA for units requiring further evaluation (Pond C is fully incised, and the inactive portion of Pond D is a closed landfill). A few photos of Pond C and the closed portion of Pond D are provided in **Appendix F** for reference, but the structures are not further analyzed in this report.

1.2.4 Description of Pond A and Appurtenances

Pond A was designed Hanson Engineers, Incorporated (Hanson). The following description of the impoundment is based on information provided in the Hanson design drawings and specifications, information received from Ameren and observations made by GZA during our Site visit. During the design and construction phases, Pond A was referred to as the Fly Ash Disposal Pond.

Pond A is located southwest of the HPS. The impoundment was commissioned in 1986, and serves as a settling pond for CCW generated by the HPS. Fly ash discharges into the impoundment through an approximately 10-inch diameter HDPE pipe that is laid over the surface of settled ash and can be moved or modified as necessary. Water and unsettled solids are discharged from Pond A to Pond B through an 18-inch diameter decant structure which is located near the southeast corner of pond. The location of the discharge pipes and decant structure in the Pond A are shown on **Figure 3**.

Pond A consists of lined earthen embankments with a crest length of approximately 2,800 feet, a general height (from the lowest downstream toe elevation to the crest of the impoundment) of approximately 22 feet, and a crest elevation of approximately 470.0 feet MSL. The pond embankments were constructed with 2-foot horizontal to one-foot vertical (2H:1V) upstream and downstream slopes consisting of a compacted mixture of clay, silt, sand, and gravel. There was no evidence that the impoundment embankments were built over wet ash or slag. A liner consisting of 80-mil, high-density polyethylene was placed on the embankment upstream slopes and also keyed into the crest. Drainage pipes were placed beneath the liner on 50 foot centers to transmit water from the top of the slope to the French Drain at the upstream toe. Gravel consisting of CA-6[2] was placed on the crest of the embankment to facilitate an access road near the southeast portion of the impoundment. A plan view of the impoundment design is provided on **Figure 4.** Typical sections of the embankments and other details are provided on **Figures 5, 6 and 7**.

Instrumentation near the impoundment includes four monitoring wells (M-2 through M-5) which are located along the southern and eastern portions of the impoundment, as shown on **Figure 8**.

1.2.5 Description of Pond B Impoundment and Appurtenances

Pond B was designed Hanson Engineers, Incorporated (Hanson). The following description of the impoundment is based on information provided in the Hanson design drawings and specifications, information received from Ameren and observations made by GZA during our Site visit. During the design and construction phases, Pond B was referred to as the Interim Ash Pond.

Pond B is located south of the HPS and east of Pond A as shown on **Figure 2**. This impoundment was commissioned in 2000, and serves as a settling pond for CCW generated by the HPS. Unsettled fly ash enters the impoundment from Pond A through an 18-inch diameter discharge pipe which is located near the western embankment of the impoundment. Unsettled bottom ash and water enters the impoundment from Pond C through a 12-inch

---

[2] CA-6 is an Illinois Department of Transportation gravel specification.

diameter pipe which is located near the northeast corner of the impoundment. A 10-inch diameter steel bypass pipe which is located near the northeast corner of the impoundment can bring water and fly ash from the facility to Pond B as necessary. Water is discharged from Pond B to the Wabash River through the decant structure located near the eastern portion of the impoundment. The location of the discharge pipes and decant pipe in Pond B are shown on **Figure 3**.

Pond B consists of lined earthen embankments with a crest length of approximately 1,900 feet and a general height (from the lowest downstream toe elevation to the crest of the impoundment) of approximately 17 feet and a crest elevation of approximately 465.0 feet (MSL). The impoundment embankments were constructed with 2.5H:1V upstream and 3H:1V downstream slopes consisting of a compacted mixture of sand and fly ash. There was no evidence that the impoundment embankments were built over wet ash or slag. An interior spur dike extends from the eastern embankment into the pond for a distance of approximately 400 feet. A liner consisting of 60-mil, high-density polyethylene was placed on the upstream embankment slopes and also keyed into the crest. Gravel consisting of CA-6 was placed on the crest to facilitate an access road near the southeast portion of the impoundment. Topsoil was placed on the downstream slope and was seeded. A plan view of the impoundment design is provided on **Figure 9.** Typical sections of the embankments and other details are provided on **Figures 10, 11 and 12**.

Instrumentation near this impoundment includes one monitoring well (M-3) which is located along the southwestern portion of the impoundment, as shown on **Figure 8**.

1.2.6 Description of the Pond D Impoundment and Appurtenances

Design documents were not available for Pond D. The following description of the impoundment is based on information provided in the global stability analysis which was performed by Geotechnology, Inc.[3] (Stability Evaluation), information received from Ameren and observations made by GZA during our Site visit. As discussed previously, the following description only applies to the active portion of Pond D.

Pond D is located southeast of the HPS and the toe of the eastern embankment is located within the flood plain of the Wabash River. The impoundment was commissioned in 1940, and serves as a settling pond for CCW generated by the HPS. Bottom ash discharges from the plant into the impoundment through a 10-inch diameter pipe which is located near the northern portion of the impoundment and water from various plant drains and treatment systems enters through several discharge pipes. Water and unsettled solids are discharged from the Pond D through a slide gate decant structure located near the southern corner of pond into a 24-inch diameter discharge pipe into Pond C. The location of the discharge pipes and decant structure in Pond D are shown on **Figure 13**.

Pond D is incised along the northern, western, and southern portions of the impoundment and consists of an earthen embankment along the eastern portion. Pond D has a crest length of approximately 1,000 feet, a general height (from the lowest downstream toe elevation to the crest of impoundment) of approximately 15 feet along the eastern embankment, and a crest elevation of approximately 453.8 feet (MSL). The embankment was constructed

---

[3] "Global Stability Evaluation Hutsonville Power Station Ash Pond D Hutsonville, Illinois" by Geotechnology, Inc. dated January 4, 2011.

with an approximately 2.5H:1V downstream slope and, according to the Stability Evaluation, consists of compacted silty clay. There was no evidence that the impoundment embankments were built over wet ash or slag.

1.2.7 Operations and Maintenance

The HPS and the impoundments are maintained by Ameren personnel. Maintenance of the HPS facility, including the impoundments, is regulated by the EPA under the National Pollutant Discharge Elimination System (NPDES) Permit No. IL-0004120. Pond A is regulated under Illinois Administrative Code as a Class III dam under permit No. 17983. Under the conditions of the permit, Ameren is required to perform routine maintenance that includes the following:

1. The slopes will be kept clear of brush and tree growth;

2. Embankments must be inspected annually by plant personnel. Gullies or erosion of the embankments should be repaired and reseeded;

3. Logs must be maintained of all assessments and maintenance to Pond A;

4. Annual submittal of forms indicating the maintenance plans are being followed; and,

5. Assessment of Pond A by a professional engineer or other qualified personnel every five years. The results of the assessment are submitted to the Division of Water Resources along with deficiencies identified and remedial measures taken.

HPS personnel perform visual assessments of the impoundments on a quarterly basis and the assessment results from March 18, 2011 were provided to GZA.

1.2.8 Size Classification

For the purposes of this EPA-mandated assessment, the size of the impoundments was based on U. S. Army Corps of Engineers (COE) criteria. Based on the maximum crest height of 22 feet and a storage volume of approximately 250 acre-feet, Pond A is classified as a **Small**-sized structure. Based on the maximum crest height of 17 feet and a storage volume of approximately 70 acre-feet, Pond B is classified as a **Small**-sized structure. Based on the maximum crest height of 15 feet and a storage volume of approximately 6 acre-feet, Pond D is classified as a **Small**-sized structure. According to guidelines established by the COE, dams with a storage volume less than 1,000 acre-feet and/or a height less than 40 feet are classified as Small-sized structures.

1.2.9 Hazard Potential Classification

Under the EPA classification system, as presented on page 2 of the EPA check list (**Appendix C**) and Definitions section (**Appendix B**), it is GZA's opinion that the Pond A, Pond B and Pond D would be considered as having a **Low** hazard potential. The hazard potential rating is based on no probable loss of human life due to failure and the low potential for environmental impacts outside of Utility-owned property.

Pond A is considered a Class III dam per Illinois Administrative Code. Similar to the EPA classification system for a **LOW** hazard structure, a dam is considered Class III when failure has a low probability for causing loss of life or substantial economic loss.

1.3 Pertinent Engineering Data

1.3.1 Drainage Area

Pond A and Pond B are raised relative to the surrounding area and have no appreciable drainage areas. The northern, western, and southern portions of Pond D are incised and an area of approximately 2 acres drains into the impoundment, as estimated by GZA from available topographic maps of the area.

1.3.2 Reservoir

Based on information provided by Ameren, Pond A, Pond B and Pond D have surface areas of 14, 4.4 and 1.2 acres at the normal operating levels. The pool areas observed on GZA's June 2, 2011 Site visit were generally consistent with those reported by Ameren. The storage volumes of Pond A, Pond B, and Pond D are approximately 250, 70, and 6 acre-feet, respectively.

1.3.3 Discharges at the Impoundment Sites

As discussed previously, water from Pond A discharges into Pond B; Pond D discharges into Pond C and then into Pond B. Water discharges from Pond B into the Wabash River. The rate of water discharge was not provided to GZA.

1.3.4 General Elevations (feet – MSL)

Elevations were taken from design drawings, the Stability Evaluation and data provided by Ameren. Unless otherwise noted, elevations were based on the United States Geological Survey (USGS) topographic map MSL vertical datum.

Pond A

A. Top of Embankment (Minimum)	± 470.0 feet
B. Upstream Water at Time of Assessment	± 469.5 feet
C. Downstream Water at Time of Assessment	± 461.8 feet[4] (Pond B)
D. Maximum Pond Water Elevation	± 468.0 feet[5]

Pond B

A. Top of Embankment (Minimum)	± 465.0 feet
B. Upstream Water at Time of Assessment	± 461.8 feet
C. Downstream Water at Time of Assessment	± Not Applicable[6]
D. Maximum Pond Water Elevation	± 462.0 feet

---

[4] The water level in Pond B was taken to be the downstream water level east of the Pond A. There is no downstream water level west, north, and south of the impoundment.

[5] The maximum pond water elevation for Pond A was taken from the requirements of the construction permit indicating pond levels should be maintained 2 to 3 feet below the crest.

[6] Given the distance from the decant structure to the discharge point, the water level in the Wabash River is not appropriate to be considered as the downstream water level. No appreciable water was present in Pond C. Therefore, no downstream water elevation is provided.

Pond D

A. Top of Embankment (Minimum)	± 453.8 feet
B. Upstream Water at Time of Assessment	± 449.8 feet
C. Downstream Water at Time of Assessment	± 436 feet[7] (Wabash River)
D. Maximum Pond Water Elevation	± Not Specified

1.3.5 Design and Construction Records and History

Design drawings and specifications for Pond A and Pond B were provided to GZA. No design documents were available for Pond D. No construction quality control documentation was available from Ameren with regards to the ash impoundments. The Stability Evaluation provides information regarding the materials that comprise the Pond D embankments. A list of the documents provided to GZA by Ameren is provided in **Appendix D**.

1.3.6 Operating Records

No operating records were available for the impoundments.

1.3.7 Previous Inspection Reports

The impoundments are visually inspected by Ameren engineers on a quarterly basis in accordance with company policies. The inspection report from March 31, 2011 was reviewed by GZA and is included as **Appendix E**. It was noted during the March 31, 2011 inspection that the required freeboard of 2 feet was not being maintained in areas of Pond A where ash levels had risen to within approximately 1 foot of the crest. It was recommended that the ash be regraded to create the necessary freeboard. In addition, the report recommended that staff gauges be added to the outfall structures.

2.0 ASSESSMENT

2.1 Visual Assessment

The HPS impoundments were inspected on June 2, 2011, by Patrick J. Harrison, P.E., and Douglas P. Simon, P.E., of GZA, and accompanied by several Ameren personnel. The weather was overcast with temperatures in the 70°s Fahrenheit. Photographs to document the current conditions of the impoundments were taken during the assessment and are provided in **Appendix F**. The water levels in the impoundments at the time of the assessment were as provided in Section 1.3.4. Underwater areas were not inspected, as this level of investigation was beyond GZA's scope of services. Copies of the EPA Checklists are provided in **Appendix C**.

With respect to our visual assessment, there was no evidence of prior releases, failures, or patchwork observed by GZA.

---

[7] The downstream water elevation was taken to be the normal flood stage elevation reported in the Stability Evaluation.

2.1.1 Pond A General Findings

In general, Pond A was found to be in **POOR** condition. An overall Site plan showing the impoundments is provided as **Figure 2**. The location and orientation of Pond A photographs provided in **Appendix F** is shown on **Figure 3**.

2.1.2 Pond A Upstream Slope (Photos 1 through 10)

Fly ash had been placed to within 1 foot of the crest elevation along the northern and western portions of the upstream slope. Furthermore, the water surface elevation along the remaining portions of the impoundment was approximately at elevation 469.5 feet at the time of assessment. Therefore, the upstream slope was below the water level or covered by ash and was not visible. No unusual movement, depressions or sloughing was evident through the overlying fly ash.

2.1.3 Pond A Crest of Impoundment (Photos 1 through 10)

The crest of Pond A had a gravel access road along the eastern portion and was seeded along the remaining portions. The crest of the impoundment had occasional animal burrows present at the time of assessment. The alignment of the crest of the impoundment appeared generally level with no large depressions or irregularities observed. Based on information provided by Ameren, the crest of the impoundment is at approximately elevation 470.0 feet MSL. No significant settlement was observed at the time of our assessment. There was approximately 6 inches of free board at the time of our assessment.

2.1.4 Pond A Downstream Slope (Photos 11 through 19)

The downstream slope of the impoundment was generally vegetated with grass. No seepage was observed on the downstream slope. Minor localized sloughing of the soils was observed along the downstream slope near the northeast corner of the impoundment.

2.1.5 Pond A Discharge Pipes (Photos 20 through 22)

Water and CCW from the plant are discharged into Pond A through a 10-inch diameter pipe that was located along the northwestern portion of the impoundment at the time of our assessment. The discharge pipe appeared to be in good condition. GZA observed the condition of the decant structure that transmits water from Pond A into Pond B. The decant structure generally appeared to be in good condition. However, the discharge pipe into Pond B was being repaired at the time of our assessment and no water was allowed to flow through the decant structure. The water levels in Pond A were in the process of being controlled via use of a diesel powered pump to transfer water from Pond A into Pond B. Delay in setting up the pumping system apparently led to the temporarily elevated levels in Pond A (i.e. water rise up to about 0.5 feet below the crest). Soon after our arrival we witnessed the operation of the pump which initiated drawdown of the water level in Pond A. It is understood that once repairs to the discharge pipe are complete, available freeboard in Pond A will return to normal levels.

2.1.6 Pond B General Findings

In general, Pond B was found to be in **POOR** condition. An overall Site plan showing the impoundments is provided as **Figure 2**. The location and orientation of photographs provided in **Appendix F** are shown on the Photo Plan in **Figure 3**.

2.1.7 Pond B Upstream Slope (Photos 23 through 29)

The water surface elevation at the time of the assessment was approximately at elevation 461.8 feet MSL. Therefore, the lower portion of the upstream slope was below the water level and not visible. The upstream slopes were covered with HDPE liner above the water level and generally in good condition. No unusual movement or sloughing was observed on the slopes.

2.1.8 Pond B Crest of Impoundment (Photos 25 through 27)

The crest of Pond B is generally covered by a gravel access road and was in good condition at the time of our assessment. The alignment of the crest of the impoundment appeared generally level with no large depressions or irregularities observed. Based on information provided by Ameren, the crest elevation was approximately elevation 465 feet MSL. No significant settlement was observed at the time of our assessment. There was approximately 3 feet of free board at the time of our assessment.

2.1.9 Pond B Downstream Slope (Photos 30 through 34)

The western portion of Pond B is adjacent to Pond A. Therefore, the discussion of downstream slopes for Pond B does not include the western embankment. The downstream slopes of the impoundment were generally vegetated with grass. No seepage or sloughing was observed on the downstream slope.

2.1.10 Pond B Discharge Pipes (Photos 35 through 38)

Decanted water and CCW from Pond A are discharged into Pond B near the western portion of the impoundment through an 18-inch diameter pipe. The discharge pipe was being repaired at the time of our assessment and a diesel powered pump was used to transfer water from Pond A into Pond B.

Decanted water and CCW from Pond C are discharged into Pond B near the northeastern corner of the impoundment through a 10-inch diameter pipe. In addition, fly ash and water can be diverted from Pond A and discharged directly into Pond B through a 10-inch diameter pipe near the northeast corner. The discharge pipes appeared to be in good condition. GZA observed the condition of the decant structure that transmits water from Pond B to the Wabash River. The visible portions of the decant structure appeared to be in good condition.

2.1.11 Pond D General Findings

In general, Pond D was found to be in **POOR** condition. An overall Site plan showing the impoundments is provided as **Figure 2**. There was no instrumentation noted near Pond D.

The location and orientation of photographs provided in **Appendix F** are shown on the Photo Plan in **Figure 13**.

2.1.12 Pond D Upstream Slope (Photos 44 through 51)

The water surface elevation at the time of our assessment was approximately at elevation 449.8 feet MSL. Therefore, the lower portion of the upstream slope was below the water level and not visible. In addition, settled bottom ash covered much of the upstream slope and crest making it difficult to determine the break between the crest and the slope.

2.1.13 Pond D Crest of Impoundment (Photos 42, 45 through 48)

The crest of Pond D was generally covered with bottom ash that was vegetated in areas. The alignment of the crest along the western and southern embankments appeared generally level with no large depressions or irregularities observed. The eastern embankment and northern crest had bottom ash stockpiled on them. The crest elevation was approximately elevation 453.8 feet MSL. No significant settlement was observed at the time of our assessment. There was approximately 4 feet of free board at the time of our assessment.

2.1.14 Pond D Downstream Slope

The eastern embankment of Pond D abuts the Wabash River flood plain and water levels in the river were above the toe elevation at the time of our assessment. The high water levels prohibited access to the embankment from below. A fence at the crest of the embankment prohibited our access from above. Based on our observations through the fence, the downstream slope of the impoundment was vegetated with grass that had not been recently mowed. No seepage or sloughing was observed on the downstream slope from the crest.

2.1.15 Pond D Discharge Pipes (Photos 44, 45, 46, 49, 52 through 56)

Water and CCW from the plant are discharged into Pond D through several discharge pipes and culverts. The discharge pipes and culverts appeared to be in good condition. GZA observed the condition of the decant structure located near the southern corner of the impoundment that transmits water from Pond D into Pond C. The decant structure appeared to be in good condition.

2.2 Caretaker Interview

Maintenance of the impoundments is the responsibility of HPS personnel. GZA met with HPS personnel and discussed the operations and maintenance procedures, regulatory requirements and the history of the impoundments since their construction. The observations, descriptions and findings presented in this report reference these discussions.

2.3 Operation and Maintenance Procedures

As discussed in Section 1.2.5, HPS personnel are responsible for maintenance of the impoundments. Limited maintenance requirements were included in the permit for Pond A. Otherwise, no formal maintenance program is in place for the impoundments. Based on our discussions with HPS personnel, the impoundments are monitored quarterly and mowed at regular intervals.

2.4 Emergency Action Plan

The HPS has a general Emergency Action Plan (EAP) for the facility, however it is not specific to potential situations that may arise at the impoundments. An EAP is not required for Class III structures per Illinois Dam Safety regulations. Note that the hazard potential classification for the impoundments is discussed in Section 1.2.8.

2.5 Hydrologic/Hydraulic Data

Based on the information provided, a hydrologic and hydraulic analysis has not been performed for Pond A, Pond B or Pond D. Although an analysis was not included in the permit, the maximum allowable water level for Pond A is limited to 2 to 3 feet below the crest. GZA did not perform an independent assessment of the hydraulics and hydrology for the impoundments as this was beyond our scope of services.

2.6 Structural and Seepage Stability

A stability analysis was conducted as part of obtaining the permit for Pond A. The analysis indicated a factor of safety against global failure of 1.5 without seismic load and 1.3 with seismic load.

A stability analysis was not included in the design documents for Pond B.

A stability analysis of (the active portion of) Pond D was conducted by Geotechnology, Inc. and the results were provided in the Stability Evaluation. Based on the results provided, the calculated factor of safety against global failure without seismic loading ranged from 1.3 to 2.1. Under seismic loading and high groundwater conditions, the calculated factor of safety was 0.9 which is below the typically accepted design of 1.0 GZA did not perform an independent assessment of the structural and seepage stability for the impoundments as this was beyond our scope of services.

3.0 ASSESSMENTS AND RECOMMENDATIONS

3.1 Assessments

In general, the overall condition of the Pond A was judged to be **POOR** and was found to have the following deficiencies:

1. Animal burrows along the crest;
2. Minor sloughing on the downstream slope;
3. No documented hydrologic/hydraulic analysis; and,
4. Conditions leading to inadequate freeboard.

In general, the overall condition of Pond B was judged to be **POOR** and was found to have the following deficiencies:

1. No documented stability analysis.

In general, the overall condition of the Pond D was judged to be **POOR** and was found to have the following deficiencies:

1. The calculated factor of safety under seismic loading was less than the generally accepted value 1.0.

Please note that access to the downstream slope of Pond D along the Wabash River was limited and additional deficiencies may or may not be present along the slope. The following sections describe the recommended approach to address current deficiencies. Prior to undertaking recommended maintenance, repairs, or remedial measures, the applicability of permits needs to be determined for activities that may occur within the jurisdiction of the appropriate regulatory agencies.

3.2 Studies and Analyses

GZA recommends the following studies and analyses:

1. Perform a stability analysis of the slopes of Pond B.

2. Perform a hydrologic/hydraulic analysis on Pond A to establish the maximum allowable water elevation.

3. Perform seismic stability analysis of the Pond D embankment.

3.3 Recurrent Operation & Maintenance Recommendations

GZA recommends the following operation and maintenance level activities:

1. Repair sloughing on the downstream slope of Pond A.

2. Fill currently observed animal burrows by injecting grout under low to moderate pressures to ensure the entire limits of the respective burrow is adequately filled.

3. Exercise stoplogs and slide gates.

4. Increase frequency of maintenance mowing such that overgrowth of vegetation is minimized.

5. Develop and Emergency Action plan for the impoundments.

3.4 Remedial Measures Recommendations

1. In conjunction with the results of the hydrologic and hydraulic analyses, make provisions for an emergency overflow spillway(s) if appropriate.

2. In conjunction with the results of the stability analyses, make provisions to address deficiencies if/as necessary.

3. In conjunction with the results of the seismic stability analysis, take measures to increase the factor of safety of the embankment for Pond D under seismic loading to at least 1.0 as appropriate.

3.5 Alternatives

There are no alternatives currently recommended.

4.0 ENGINEER'S CERTIFICATION

I acknowledge that the management units referenced herein, the Pond A, Pond B and Pond D have been assessed to be in **POOR** condition on June 2, 2011.

Patrick J. Harrison, P.E.
Senior Consultant

FIGURES

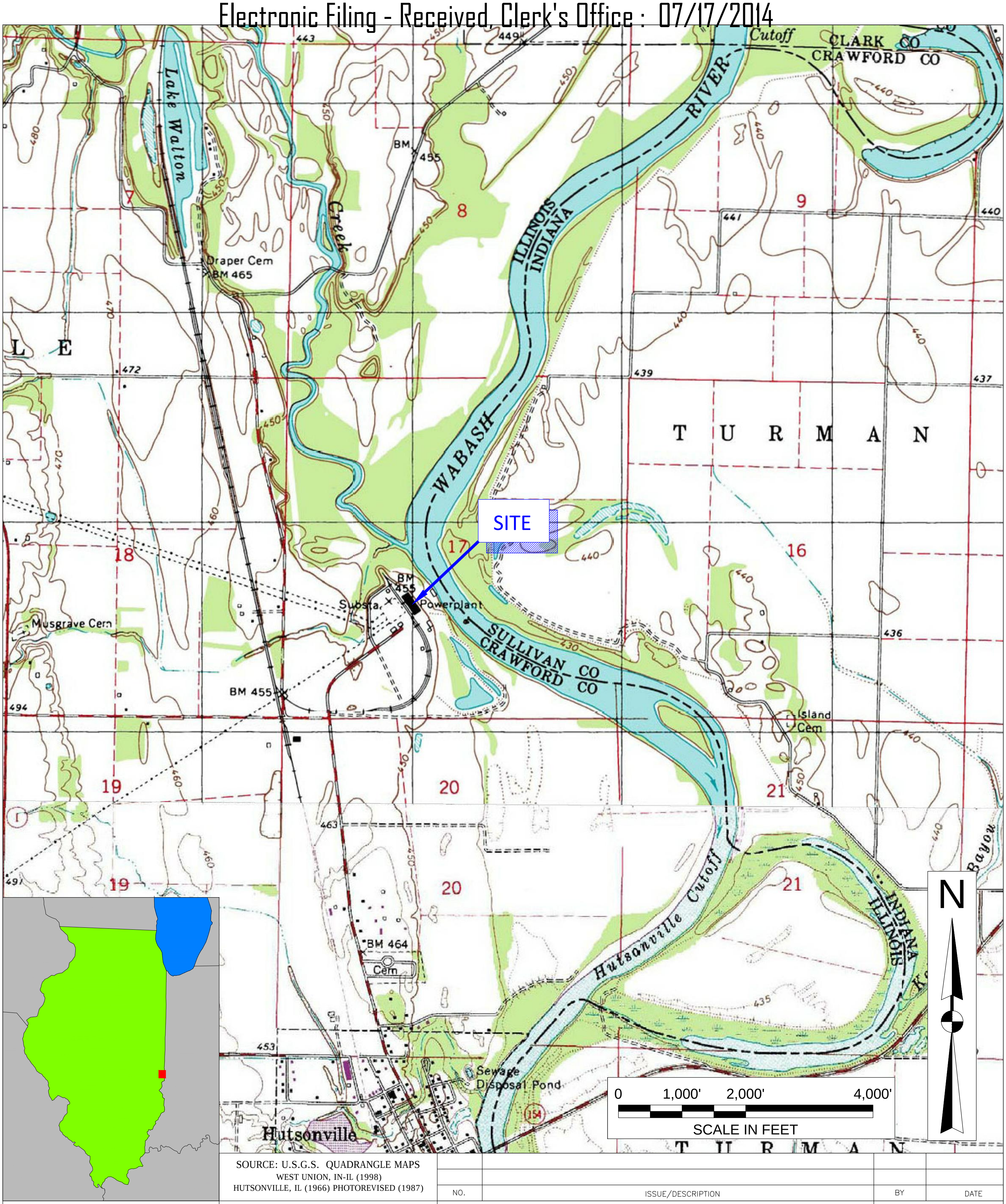

SOURCE: U.S.G.S. QUADRANGLE MAPS
WEST UNION, IN-IL (1998)
HUTSONVILLE, IL (1966) PHOTOREVISED (1987)

NO.	ISSUE/DESCRIPTION	BY	DATE

PREPARED BY:

GZA GeoEnvironmental, Inc.
Engineers and Scientists
20900 SWENSON DRIVE, SUITE 150
WAUKESHA, WISCONSIN 53186
(262) 754-2560

PREPARED FOR:

SITE LOCATION MAP

HUTSONVILLE POWER STATION
15142 EAST 1900th AVENUE
HUTSONVILLE, ILLINOIS

FIGURE
1
SHEET NO.

PROJ MGR:	DPS	REVIEWED BY:	PJH	CHECKED BY:	DPS	DATE 11/10/11	PROJECT NO. 01.0170142.30
DESIGNED BY:	DPS	DRAWN BY:	CLK	SCALE:	1 : 24000		

REVISION NO.

GZA-J:\GZA_USA#\01.0170142.30 Ash Imp. Round 10\01.0170142.30 Task 9 - Hutsonville\Drawings\Autocad\SITE LOCATION.dwg [FIGURE 1 - SITE LOCATION] November 10, 2011 - 9:24am justin.hegarty

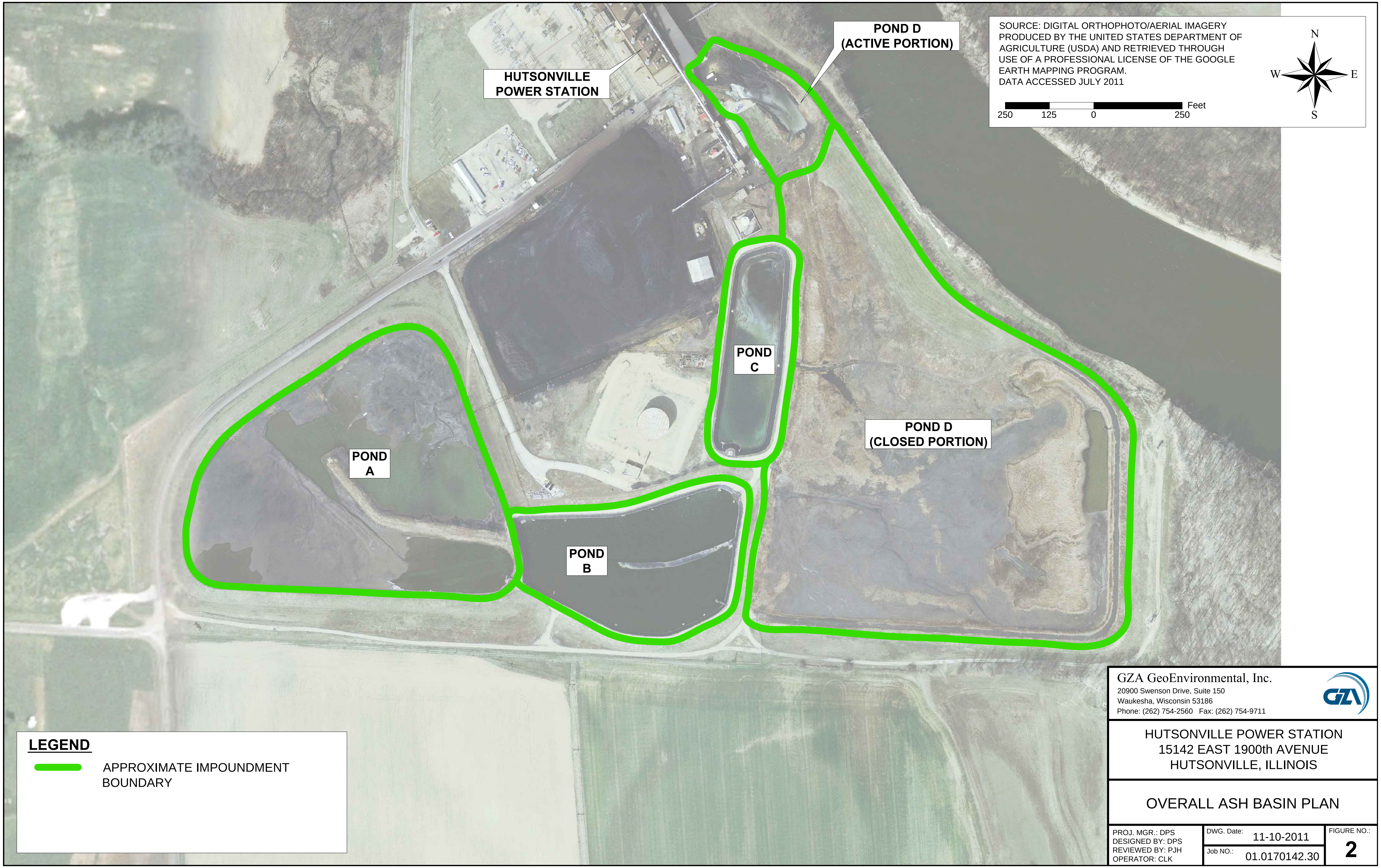

SOURCE: DIGITAL ORTHOPHOTO/AERIAL IMAGERY PRODUCED BY THE UNITED STATES DEPARTMENT OF AGRICULTURE (USDA) AND RETRIEVED THROUGH USE OF A PROFESSIONAL LICENSE OF THE GOOGLE EARTH MAPPING PROGRAM.
DATA ACCESSED JULY 2011

LEGEND

🟩 APPROXIMATE IMPOUNDMENT BOUNDARY

GZA GeoEnvironmental, Inc.
20900 Swenson Drive, Suite 150
Waukesha, Wisconsin 53186
Phone: (262) 754-2560 Fax: (262) 754-9711

HUTSONVILLE POWER STATION
15142 EAST 1900th AVENUE
HUTSONVILLE, ILLINOIS

OVERALL ASH BASIN PLAN

PROJ. MGR.: DPS
DESIGNED BY: DPS
REVIEWED BY: PJH
OPERATOR: CLK

DWG. Date: 11-10-2011
Job NO.: 01.0170142.30

FIGURE NO.: 2

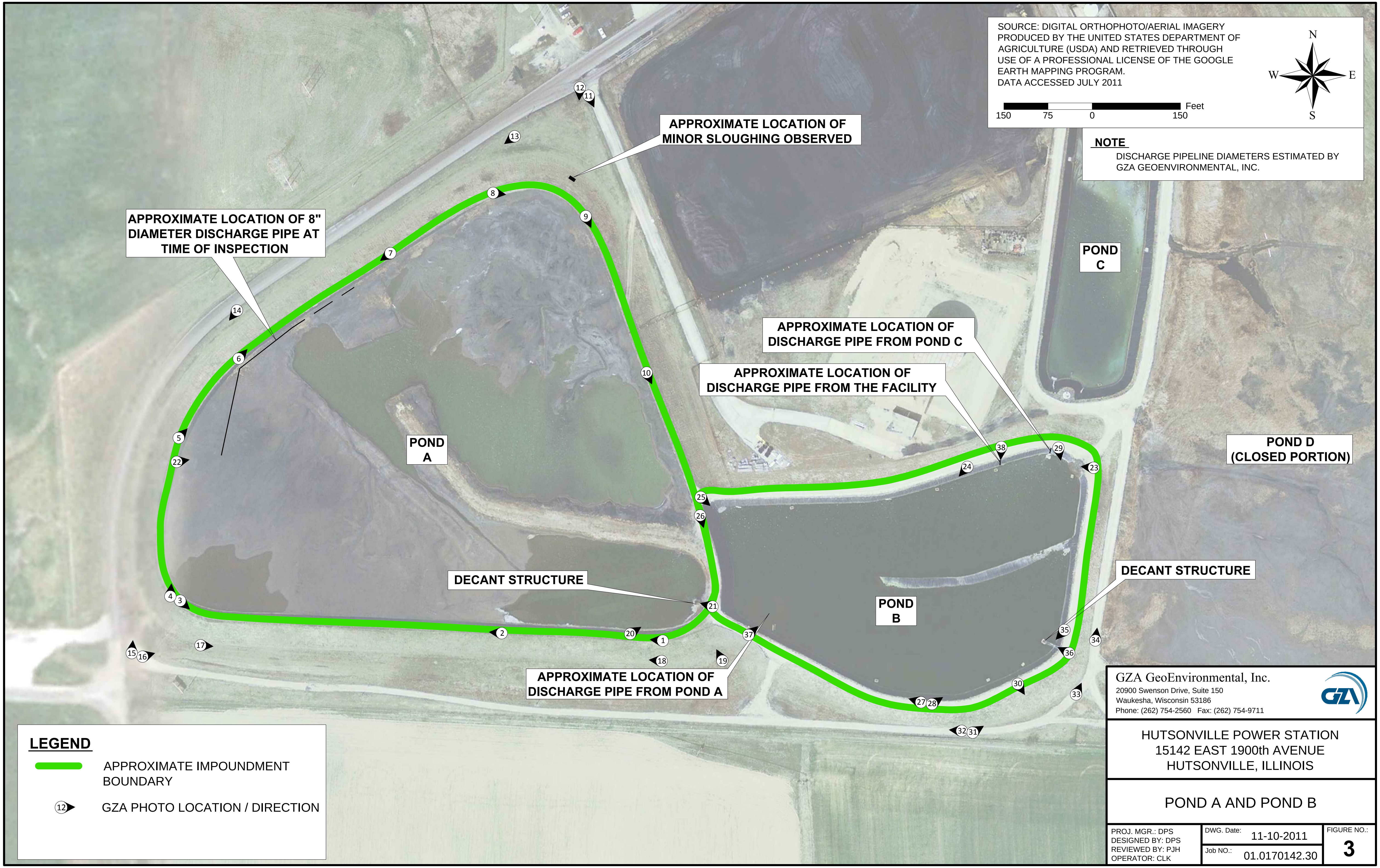

SOURCE: DIGITAL ORTHOPHOTO/AERIAL IMAGERY PRODUCED BY THE UNITED STATES DEPARTMENT OF AGRICULTURE (USDA) AND RETRIEVED THROUGH USE OF A PROFESSIONAL LICENSE OF THE GOOGLE EARTH MAPPING PROGRAM.
DATA ACCESSED JULY 2011

NOTE

DISCHARGE PIPELINE DIAMETERS ESTIMATED BY GZA GEOENVIRONMENTAL, INC.

LEGEND

🟩 APPROXIMATE IMPOUNDMENT BOUNDARY

⑫➤ GZA PHOTO LOCATION / DIRECTION

GZA GeoEnvironmental, Inc.
20900 Swenson Drive, Suite 150
Waukesha, Wisconsin 53186
Phone: (262) 754-2560 Fax: (262) 754-9711

HUTSONVILLE POWER STATION
15142 EAST 1900th AVENUE
HUTSONVILLE, ILLINOIS

POND A AND POND B

PROJ. MGR.: DPS
DESIGNED BY: DPS
REVIEWED BY: PJH
OPERATOR: CLK

DWG. Date: 11-10-2011
Job NO.: 01.0170142.30

FIGURE NO.: 3

GZA-J:\GZA_USA#\01.0170142.30 Ash Imp. Round 10\01.0170142.30 Task 9 - Hutsonville\Drawings\Autocad\SITE PLANS.dwg [FIG 3] November 10, 2011 - 9:29am justin.hegarty

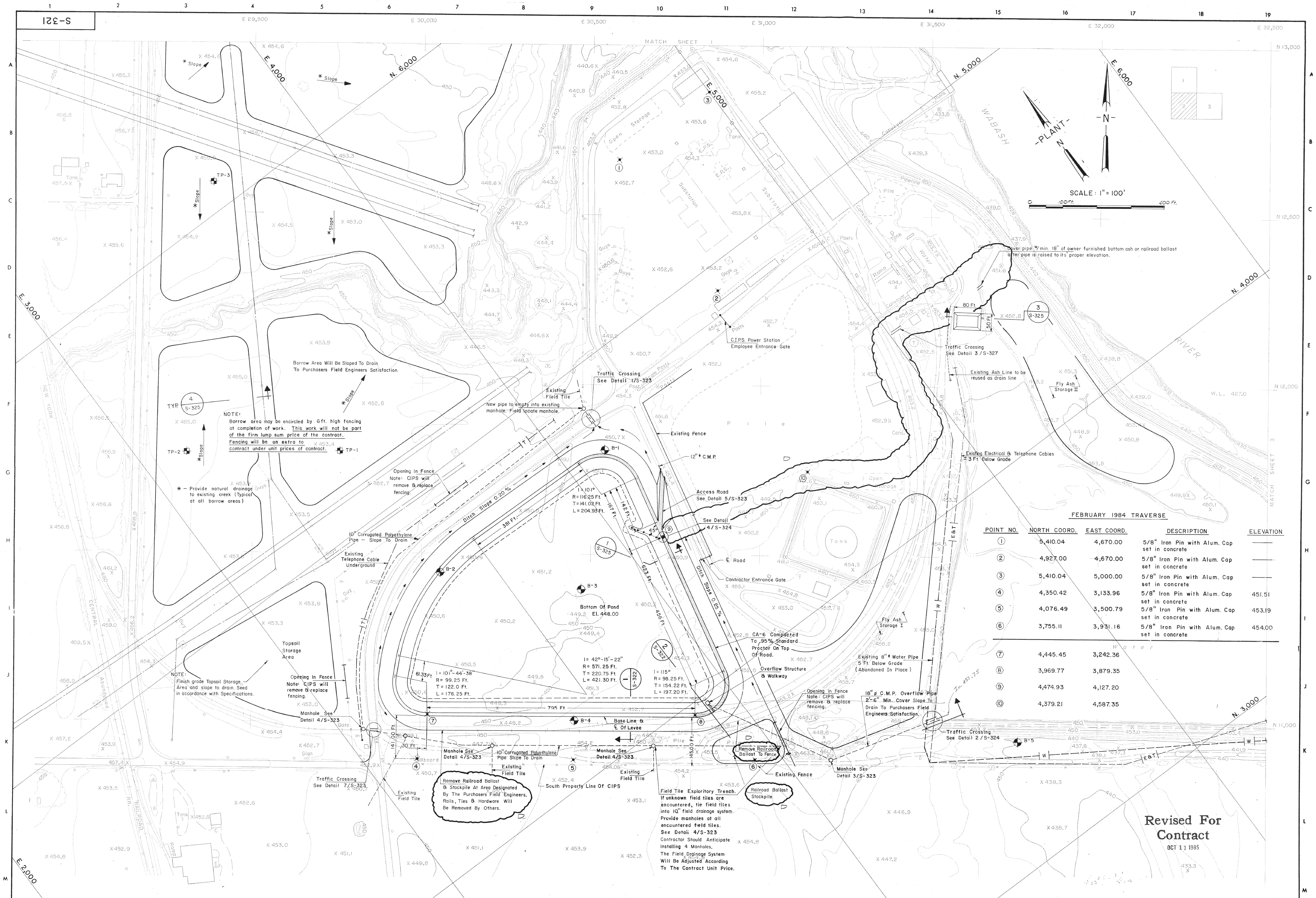

FEBRUARY 1984 TRAVERSE

POINT NO.	NORTH COORD.	EAST COORD.	DESCRIPTION	ELEVATION
①	5,410.04	4,670.00	5/8" Iron Pin with Alum. Cap set in concrete	———
②	4,927.00	4,670.00	5/8" Iron Pin with Alum. Cap set in concrete	———
③	5,410.04	5,000.00	5/8" Iron Pin with Alum. Cap set in concrete	———
④	4,350.42	3,133.96	5/8" Iron Pin with Alum. Cap set in concrete	451.51
⑤	4,076.49	3,500.79	5/8" Iron Pin with Alum. Cap set in concrete	453.19
⑥	3,755.11	3,931.16	5/8" Iron Pin with Alum. Cap set in concrete	454.00
⑦	4,445.45	3,242.36		
⑧	3,969.77	3,879.35		
⑨	4,474.93	4,127.20		
⑩	4,379.21	4,587.35		

DRAWING RECORD

REV	DATE	REVIEWED	APPROVED	DESCRIPTION
A	4-9-84	T.R.G.	S.A.P.	For Bid Purposes Only 0501-01
B	6-17-85	T.R.G.	S.A.P.	For Bid Purposes Only 0501-01 1985
C	9-16-85	T.R.G.	S.A.P.	For Bid Purposes Only 0501-01 1985
D	10-11-85	T.R.G.	S.A.P.	Revised For Contract 0501-01 1985

DRAWING RECORD

REV	DATE	REVIEWED	APPROVED	DESCRIPTION

FILE NO. 8453012
SCALE As Shown
DATE April 1984
PCMS No. 0501
DESIGNED
CHECKED
DRAWN C.C.
CHECKED TRG

FLY ASH DISPOSAL POND
SITE PLAN
HUTSONVILLE POWER STATION
CENTRAL ILLINOIS PUBLIC SERVICE CO.

HANSON ENGINEERS INCORPORATED
SPRINGFIELD, IL • PEORIA, IL • ROCKFORD, IL

DRAWING NO. S-321
REV D
SHEET__OF__

NOTE:
IMAGE HAS BEEN REDUCED AND IS NO LONGER TO A SCALE

GZA
GeoEnvironmental, Inc.
20900 Swenson Drive ■ Waukesha, Wisconsin 53186
Phone (262) 754-2560 ■ Fax (262) 754-9711
www.gza.com

REV. NO. | DESCRIPTION | BY | DATE

HUTSONVILLE POWER STATION
15142 EAST 1900th AVENUE
HUTSONVILLE, ILLINOIS

POND A
PLAN OF DESIGN

PROJ MGR: DPS
DESIGNED BY: DPS
REVIEWED BY: PJH
OPERATOR: CLK
DATE: 10-24-2011

JOB NO.
01.0170142.30

FIGURE NO.
4

GZA Drawing Name: J:\GZA_USA#\01.0170142.30 Ash Imp. Round 10\01.0170142.30 Task 9 – Hutsonville\Drawings\Autocad\Scanned Figures – Hutsonville.dwg Last Modified: Oct 24, 2011 – 1:23pm Plotted on: Nov 10, 2011 – 9:32am by justin.hegarty

S-322

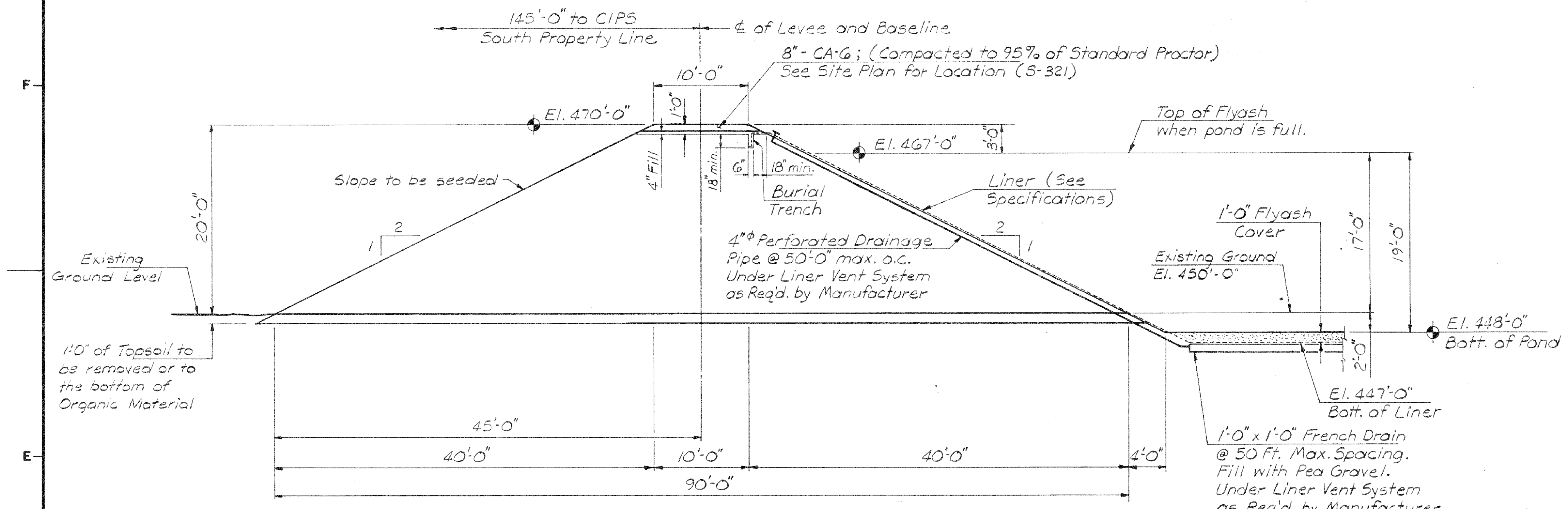

SECTION ① S-322
Scale: 1/8" = 1'-0"

Note:
Provide 2'-6" Min. cover over the top of the 18"Ø Overflow Pipe. Slope to drain to Purchasers Field Engineers Satisfaction.

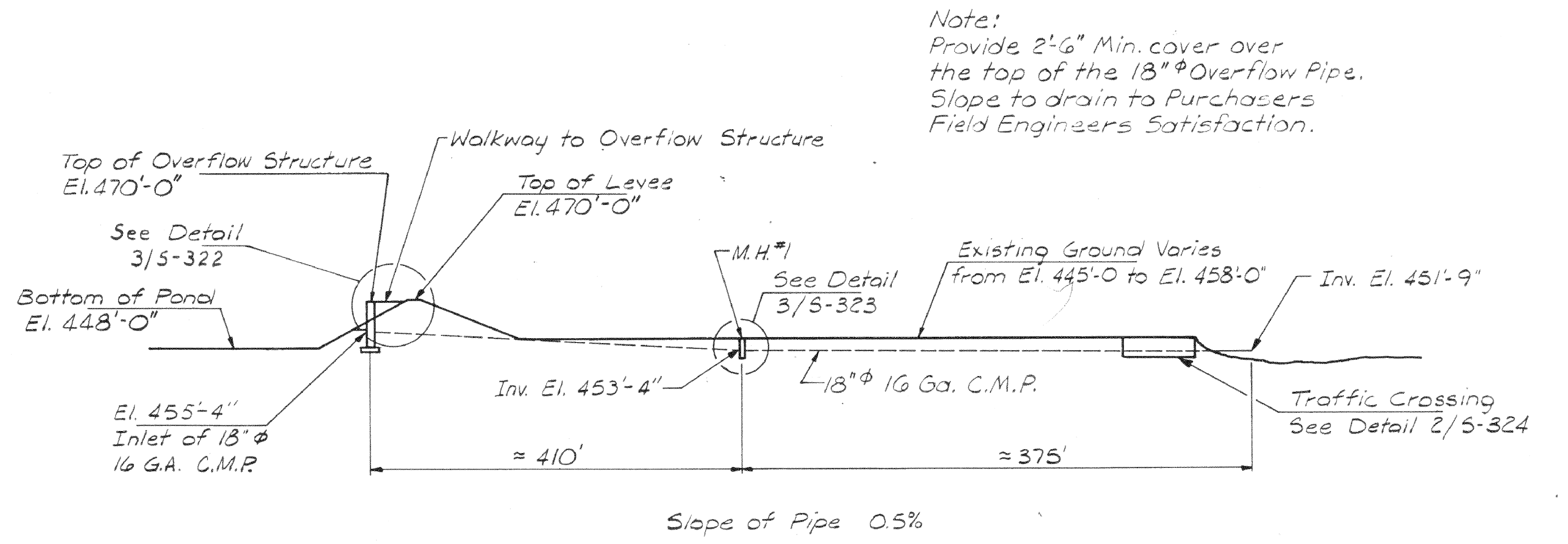

SECTION ② S-322
No Scale

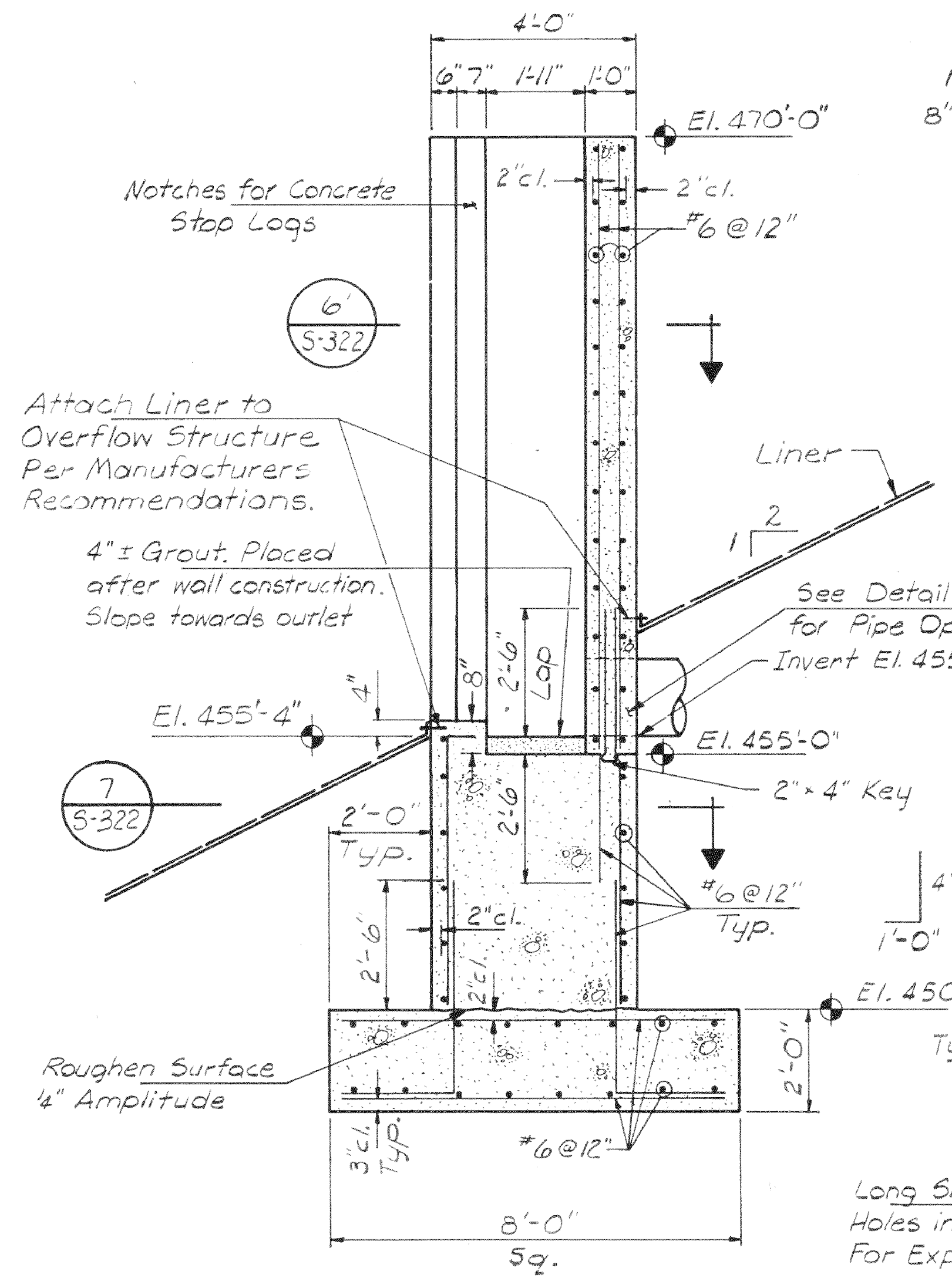

SECTION ⑤ S-322
Scale: 3/8" = 1'-0"

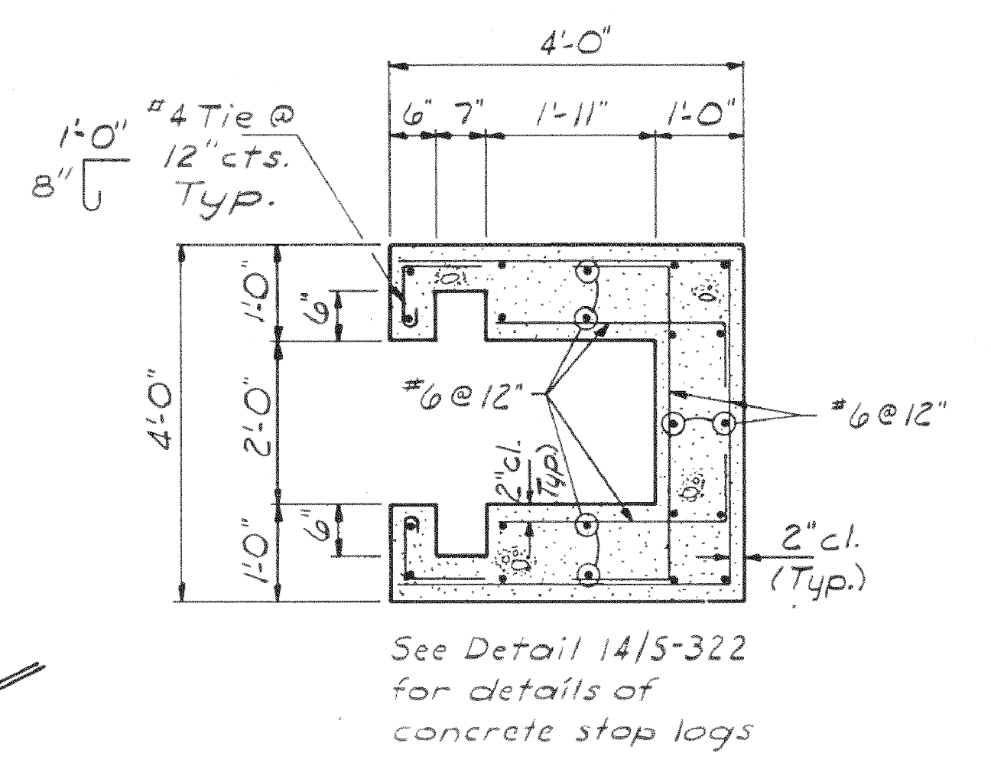

SECTION ⑥ S-322
Scale: 1/2" = 1'-0"

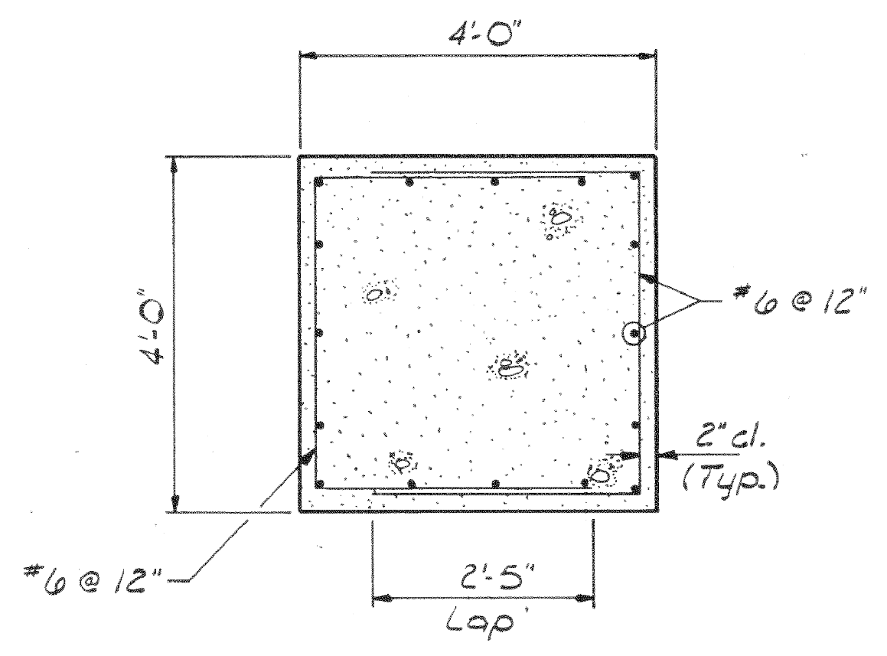

SECTION ⑦ S-322
Scale: 1/2" = 1'-0"

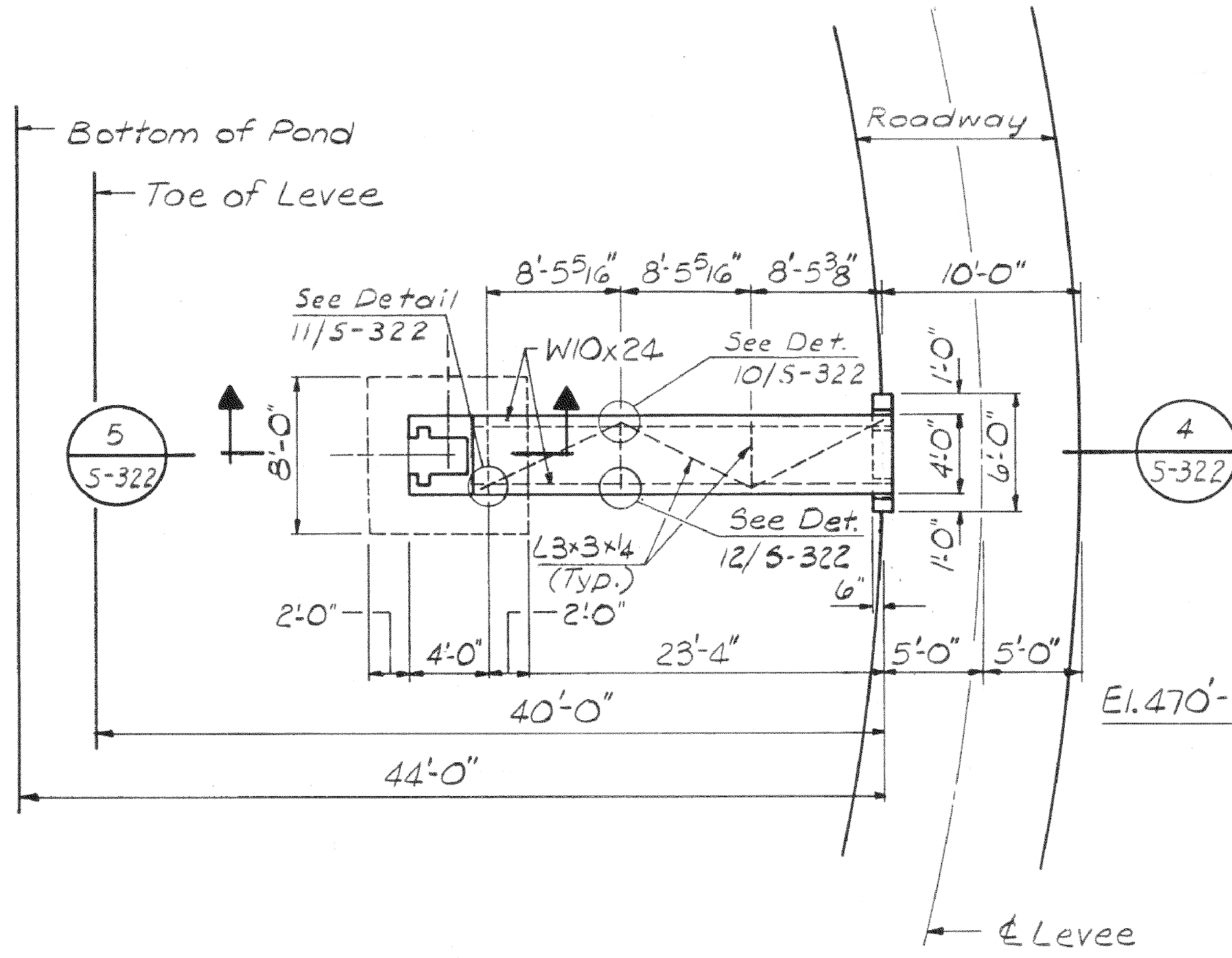

DETAIL ③ S-322
Scale: 1/8" = 1'-0"

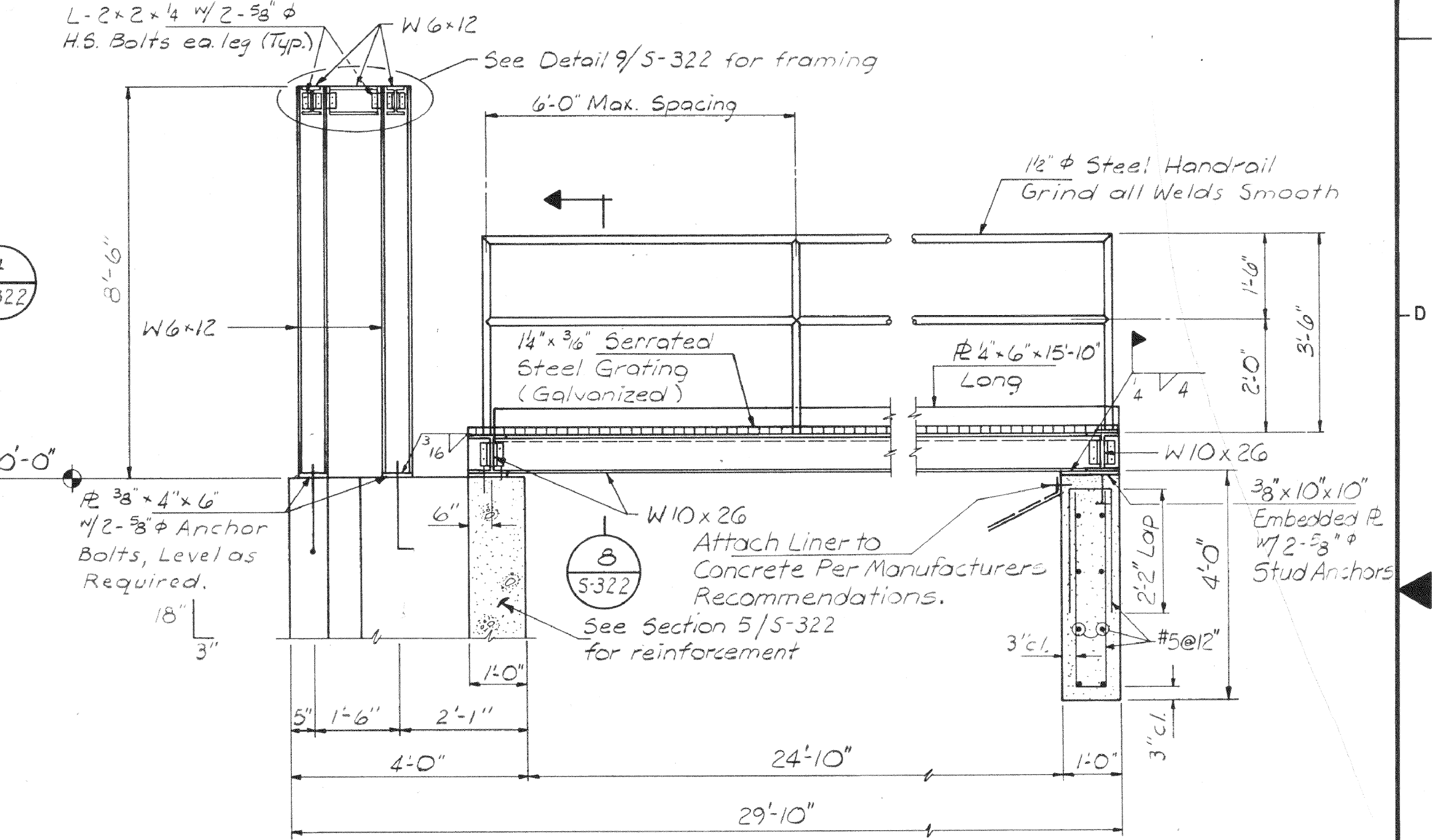

SECTION ④ S-322
Scale: 1/2" = 1'-0"

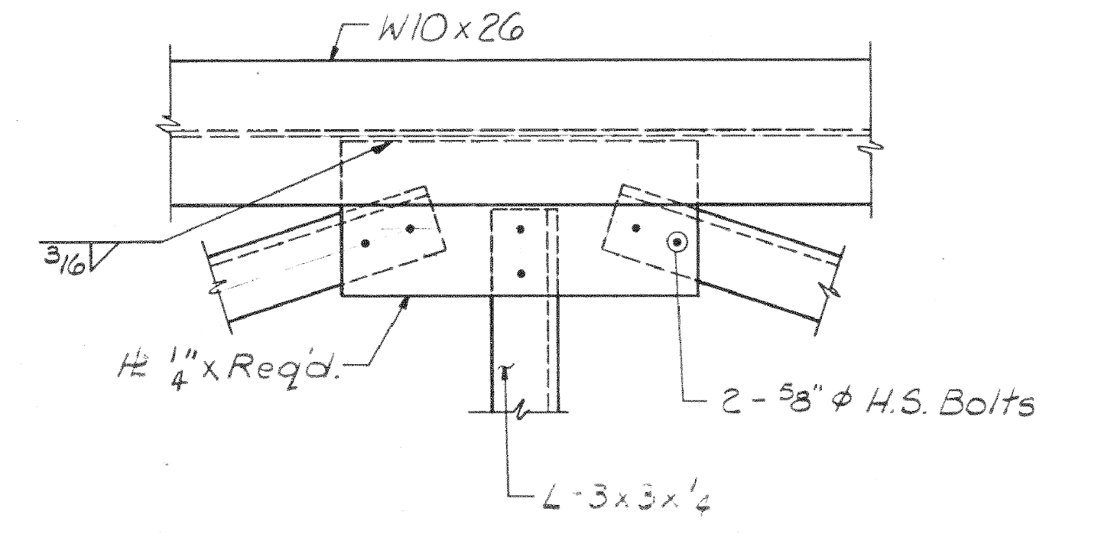

DETAIL ⑩ S-322
Scale: 1 1/2" = 1'-0"

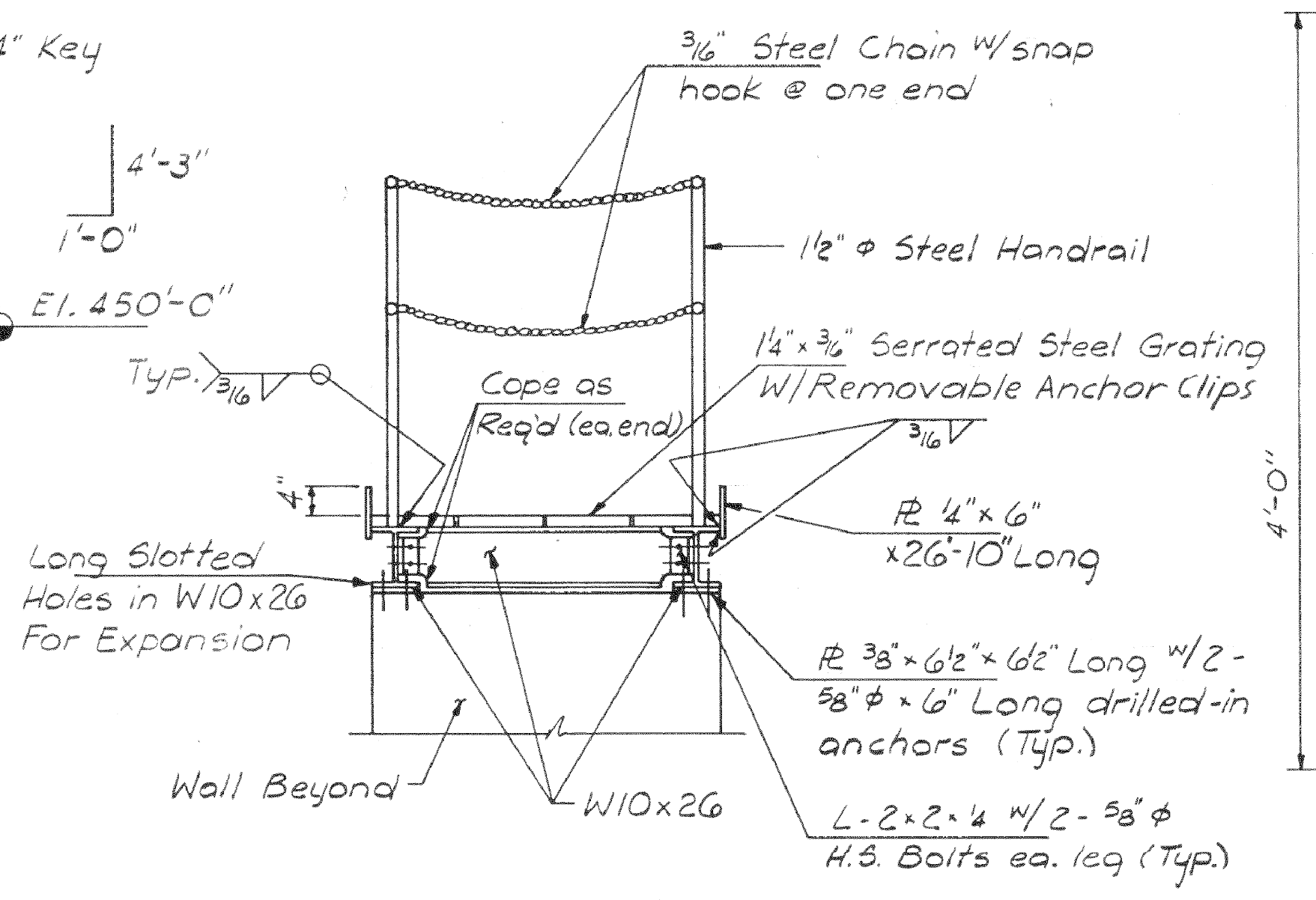

SECTION ⑧ S-322
Scale: 1/2" = 1'-0"

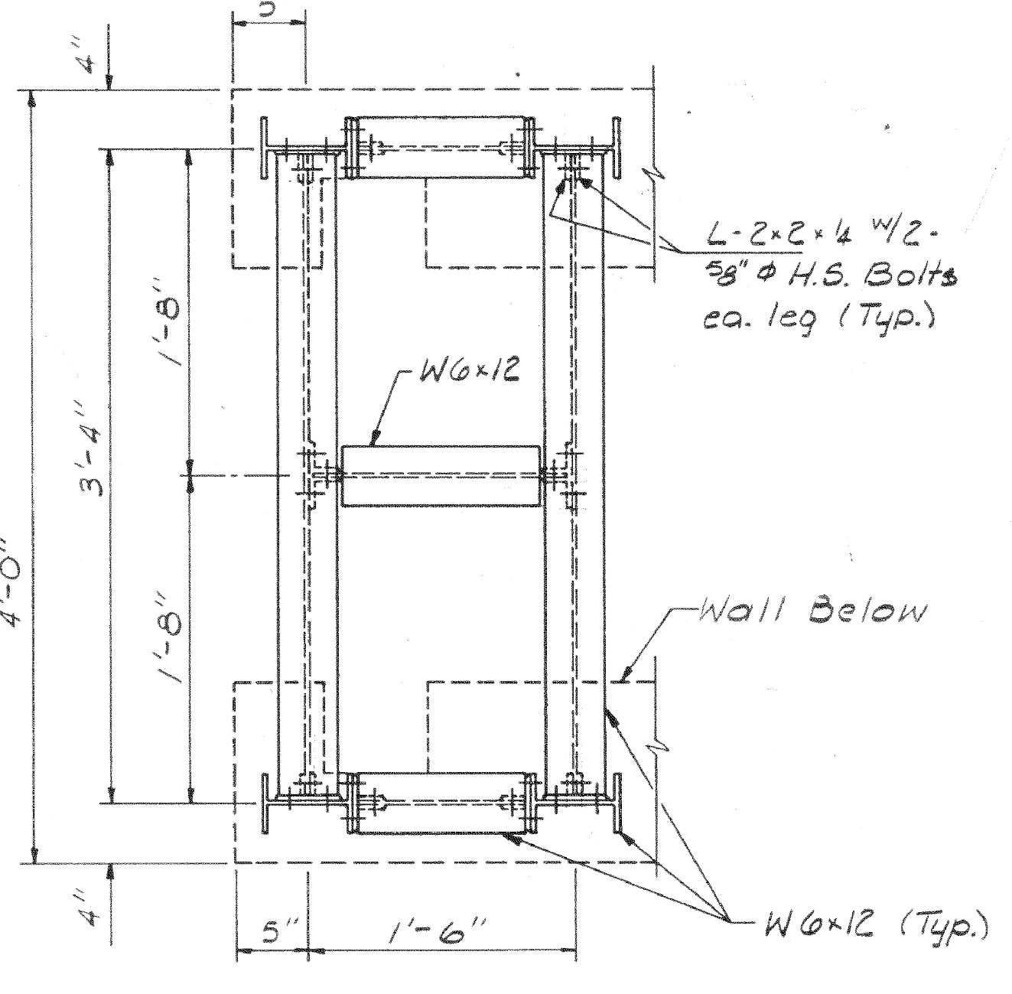

DETAIL ⑨ S-322
Scale: 1" = 1'-0"

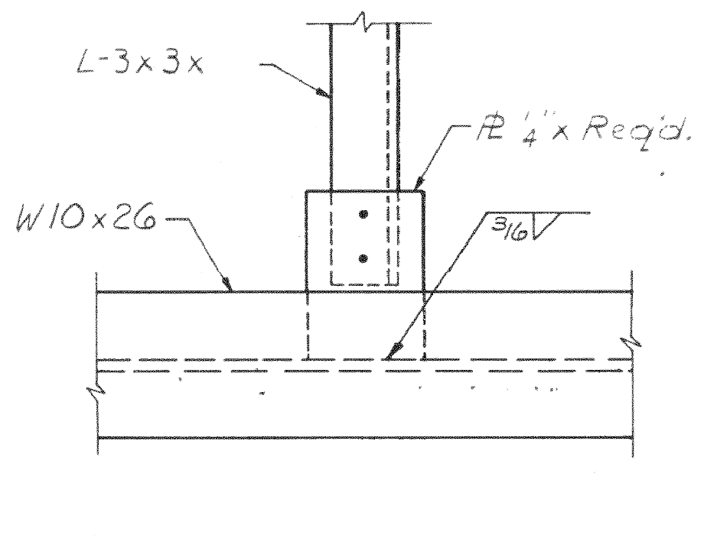

DETAIL ⑫ S-322
Scale: 1 1/2" = 1'-0"

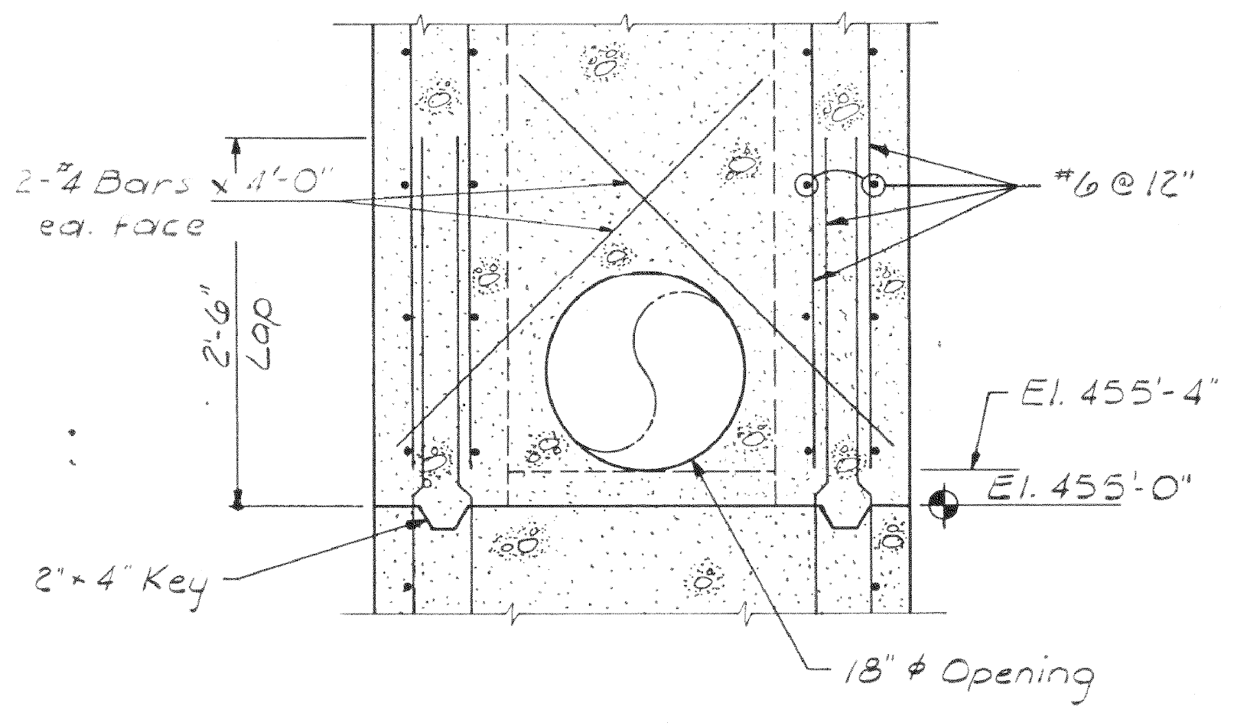

DETAIL ⑬ S-322
Scale: 3/4" = 1'-0"

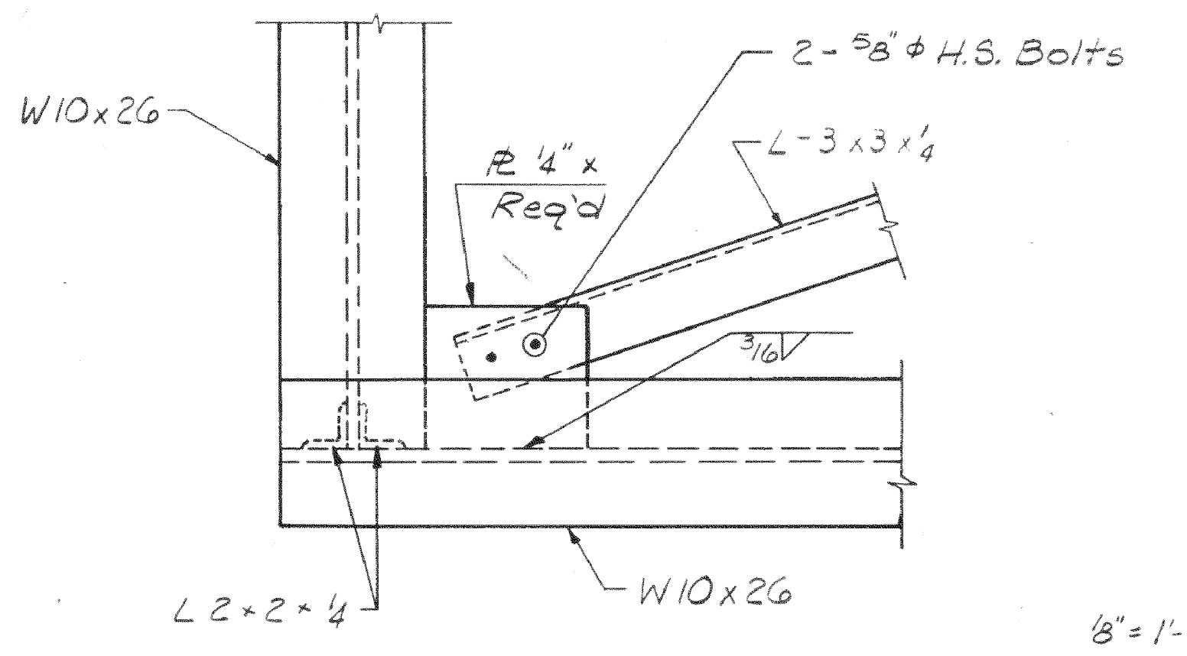

DETAIL ⑪ S-322
Scale: 1 1/2" = 1'-0"

Note:
Contractor Shall Provide 14 Stop Logs

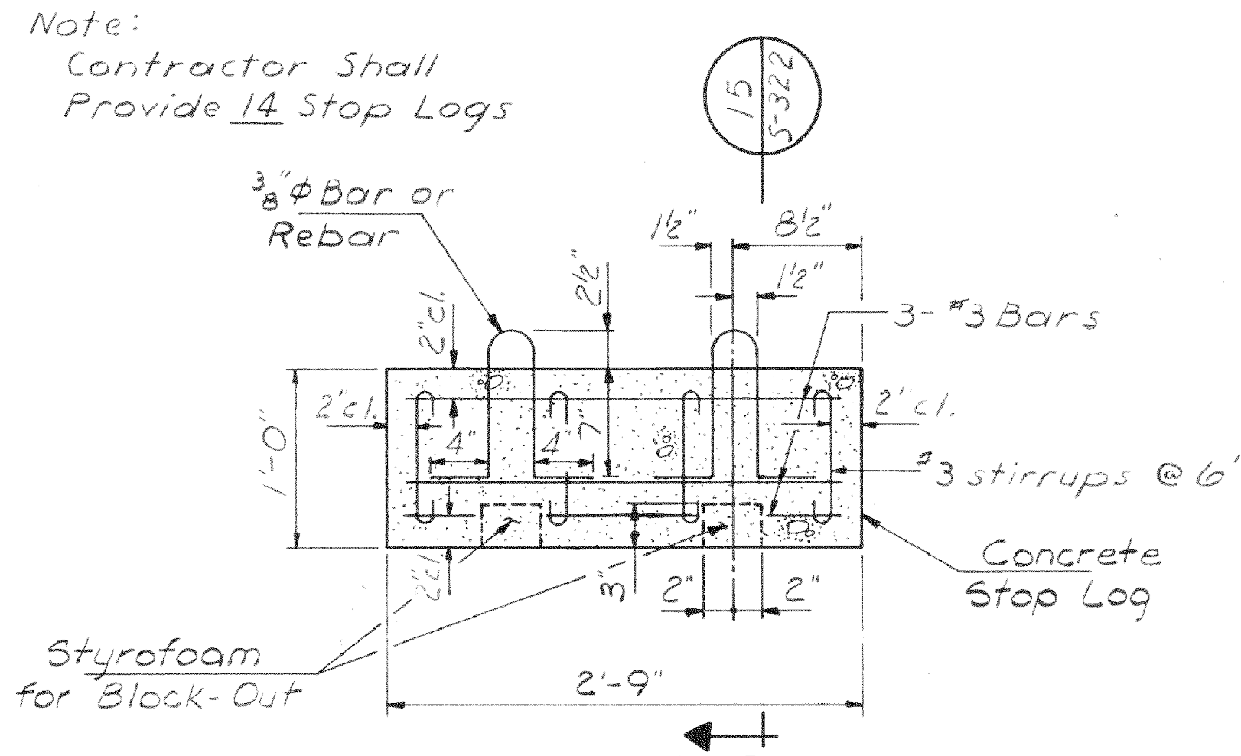

DETAIL ⑭ S-322
Scale: 1" = 1'-0"

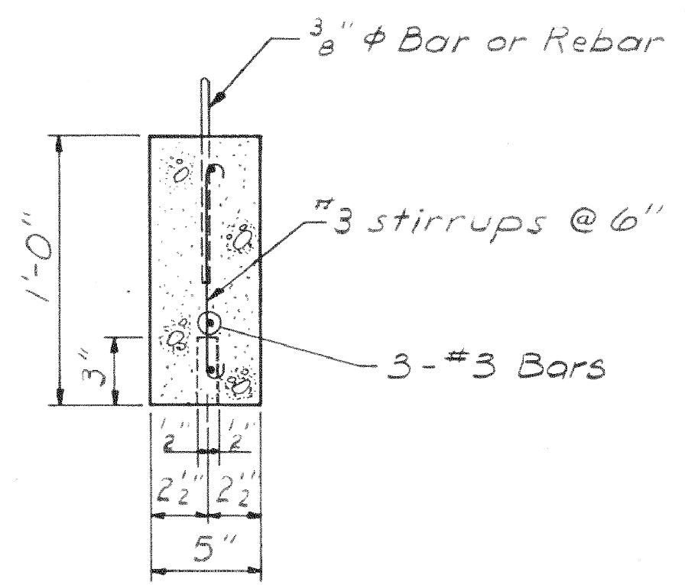

SECTION ⑮ S-322
Scale: 1 1/2" = 1'-0"

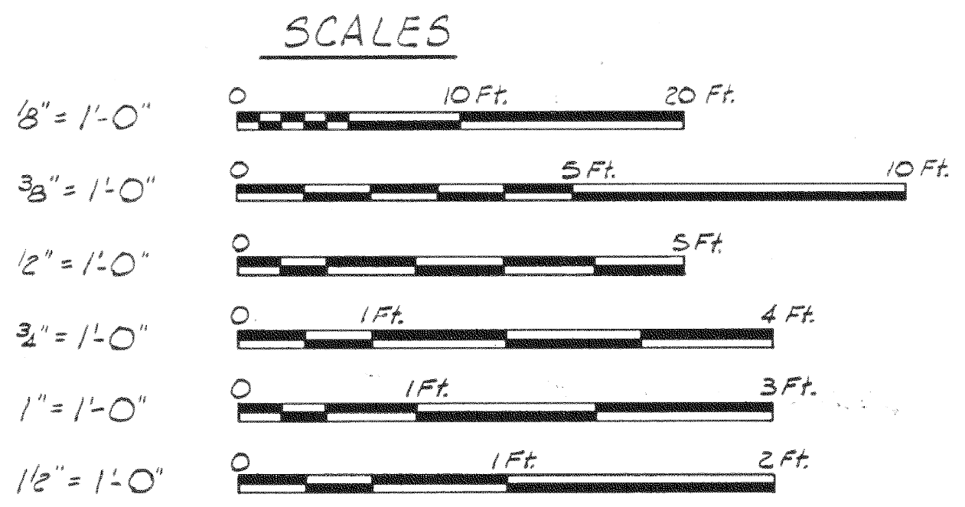

Revised For Contract
OCT 11 1985

REV	DATE	REVIEWED	APPROVED	DRAWING RECORD DESCRIPTION
A	4-9-84	T.R.G.	S.A.R.	For Bid Purposes Only 0501-01
B	6-17-85	T.R.G.	S.A.R.	For Bid Purposes Only 0501-01 1985
C	9-16-85	T.R.G.	S.A.R.	For Bid Purposes Only 0501-01 1985
D	10-11-85	T.R.G.	S.A.R.	Revised For Contract 0501-01 1985

REV	DATE	REVIEWED	APPROVED	DRAWING RECORD DESCRIPTION

REGISTERED STRUCTURAL ENGINEER OF ILLINOIS

FILE NO.	8453012
SCALE	As Shown
DATE	April, 1984
PCMS No.	0501
DESIGNED	WDL
CHECKED	TRG
DRAWN	RJF
CHECKED	TRG

FLY ASH DISPOSAL POND
DETAILS AND SECTIONS
HUTSONVILLE POWER STATION
CENTRAL ILLINOIS PUBLIC SERVICE CO.

HANSON ENGINEERS
SPRINGFIELD, IL • PEORIA, IL • ROCKFORD, IL

DRAWING NO. S-322
REV D
SHEET __ OF __

REV. NO.	DESCRIPTION	BY	DATE

NOTE: IMAGE HAS BEEN REDUCED AND IS NO LONGER TO A SCALE

GZA GeoEnvironmental, Inc.

PROJ MGR: DPS
DESIGNED BY: DPS
REVIEWED BY: PJH
OPERATOR: CLK
DATE: 10-24-2011

HUTSONVILLE POWER STATION
15142 EAST 1900th AVENUE
HUTSONVILLE, ILLINOIS

POND A
TYPICAL CROSS SECTION

JOB NO. 01.0170142.30
FIGURE NO. 5

S-323

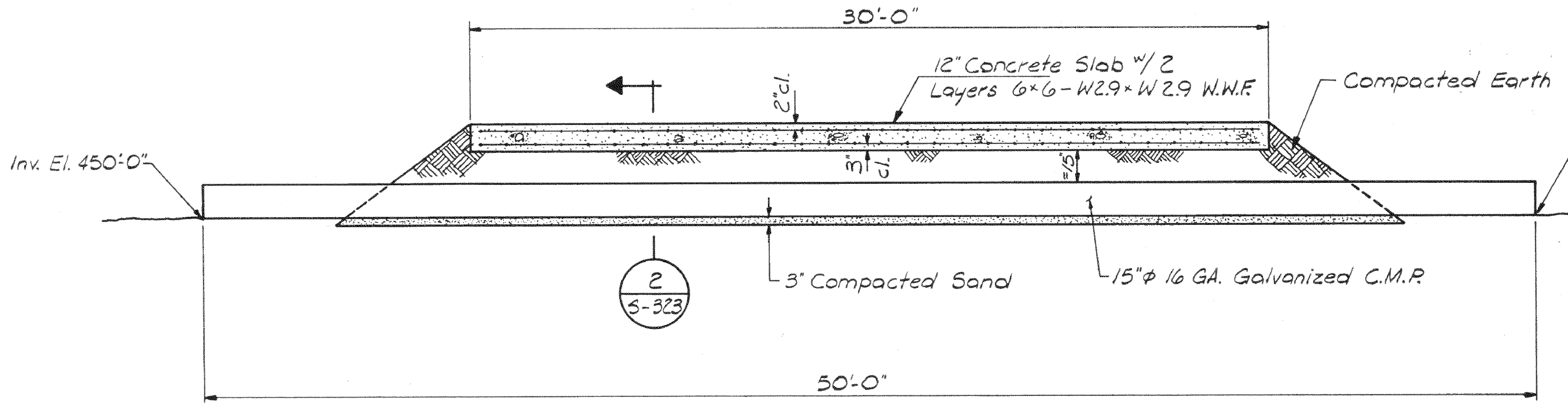

DETAIL ① S-323
Scale: ¼" = 1'-0"

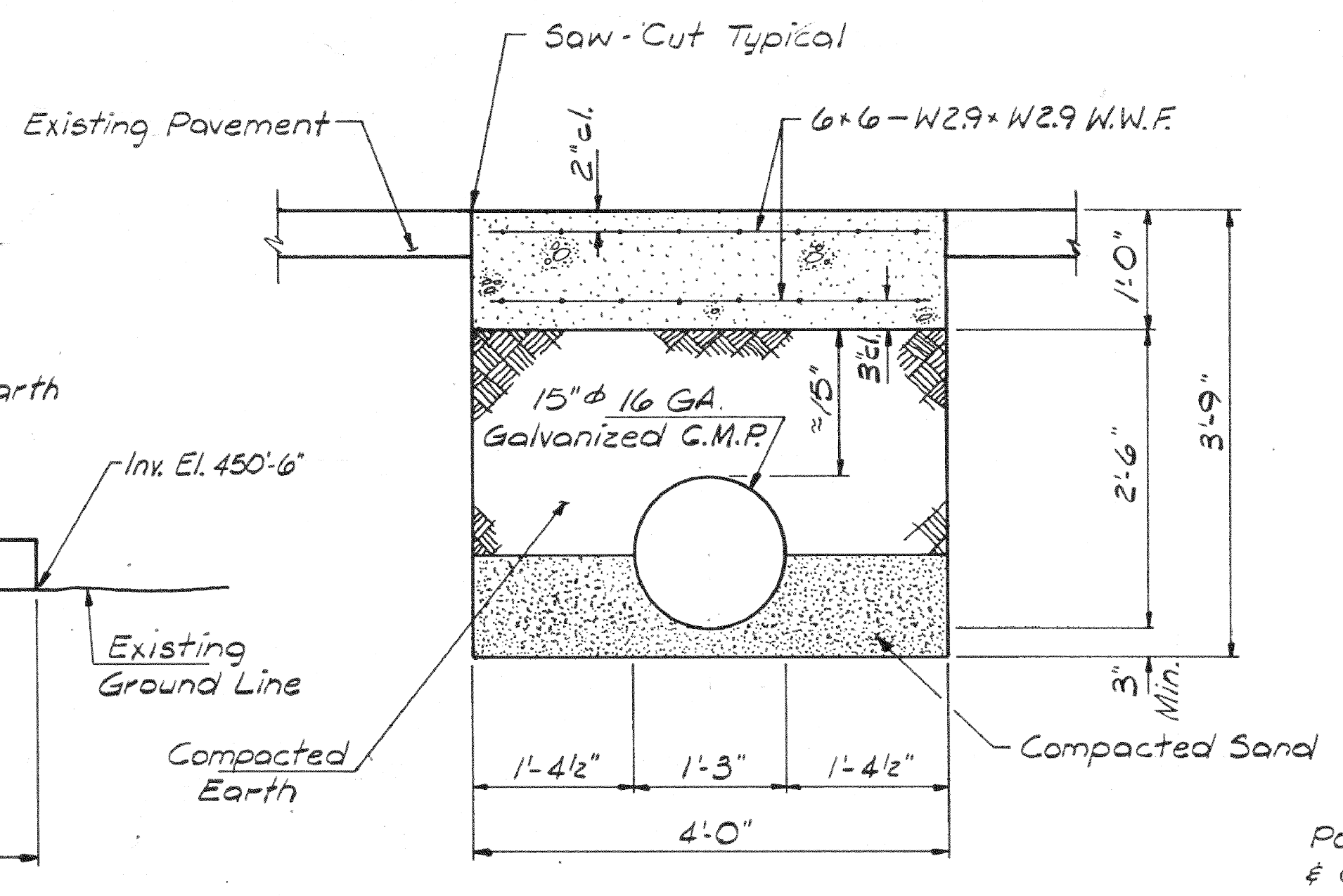

SECTION ② S-323
Scale: ¾" = 1'-0"

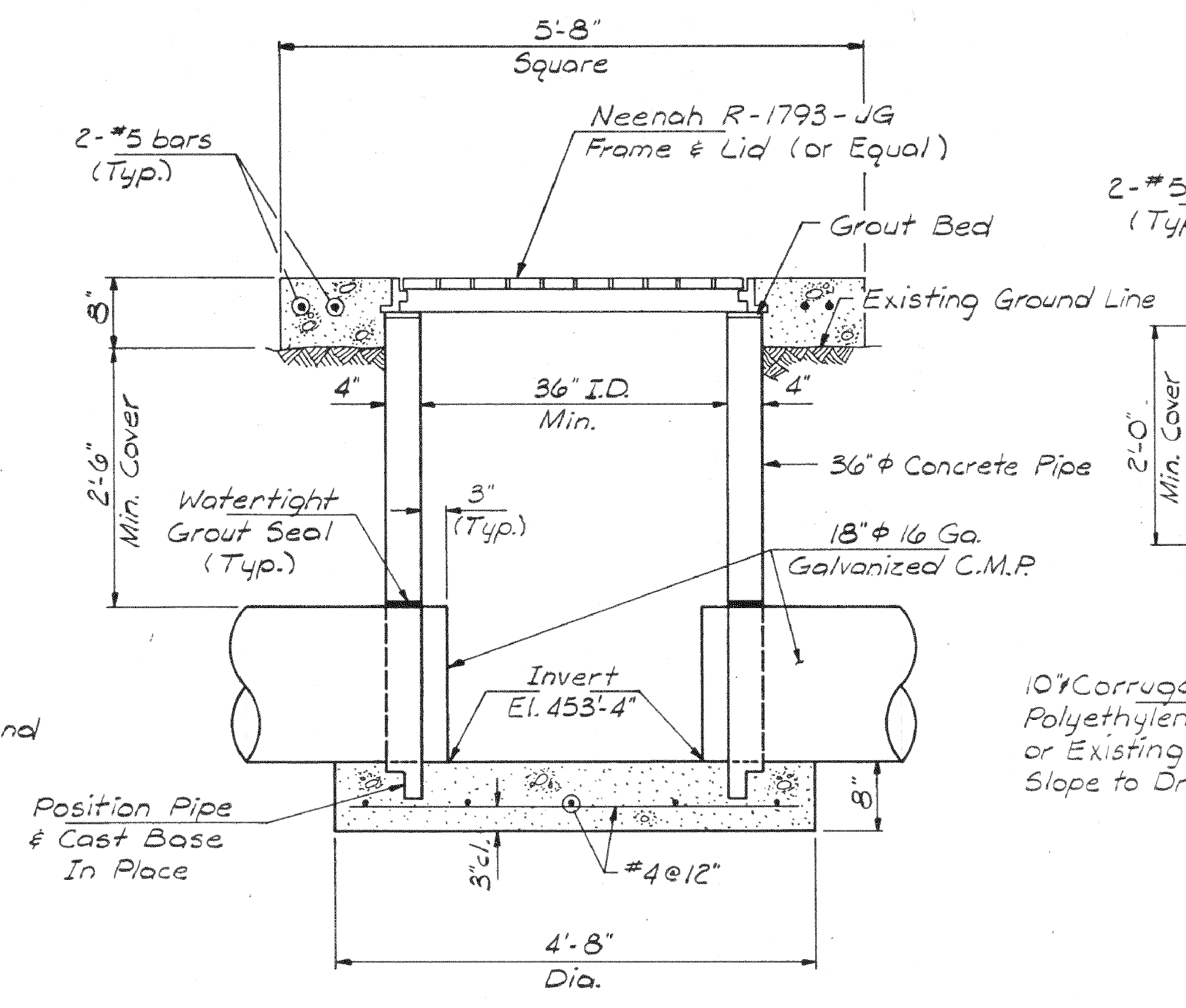

DETAIL ③ S-323
Scale: ¾" = 1'-0"

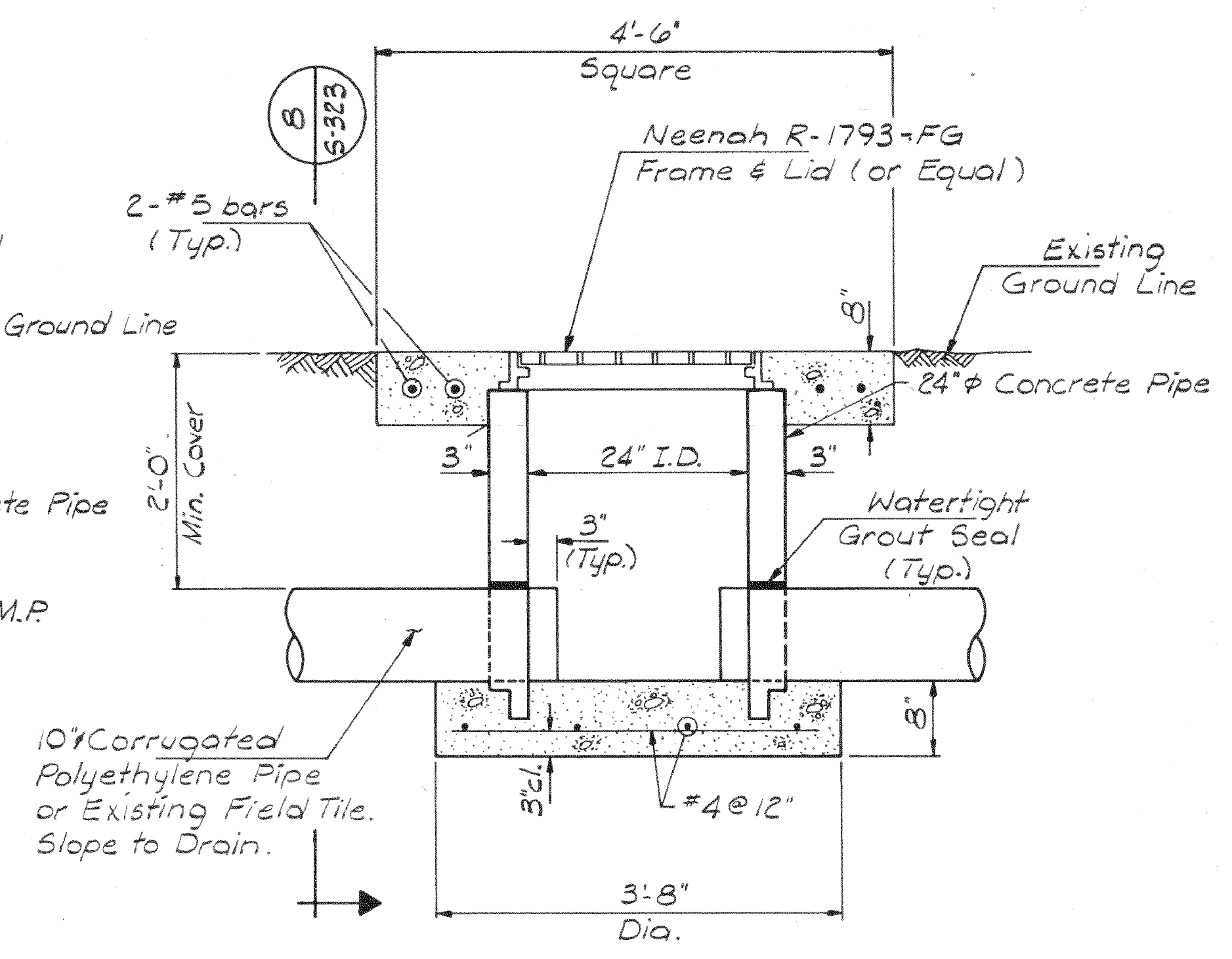

DETAIL ④ S-323
Scale: ¾" = 1'-0"

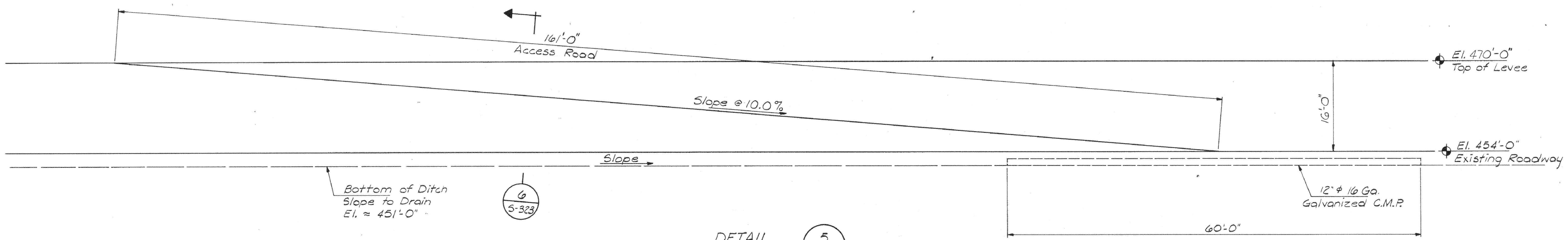

DETAIL ⑤ S-323
Scale: ⅛" = 1'-0"

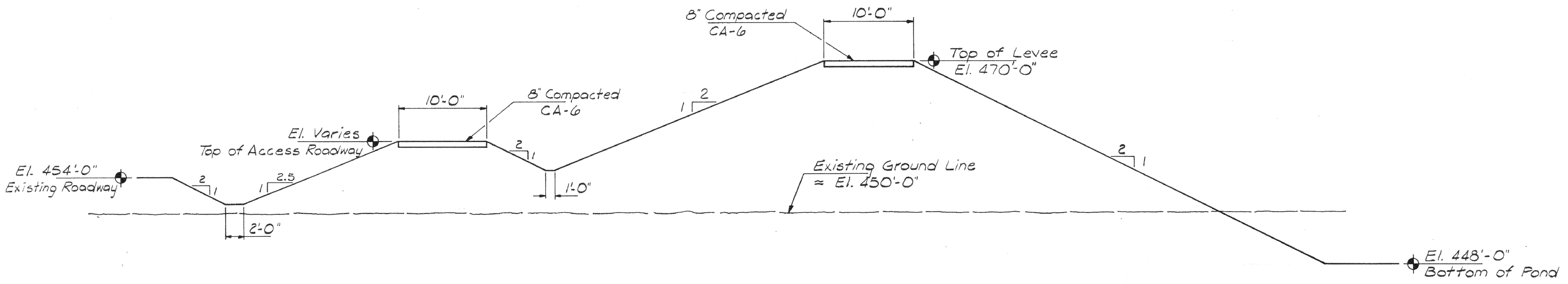

SECTION ⑥ S-323
Scale: ⅛" = 1'-0"

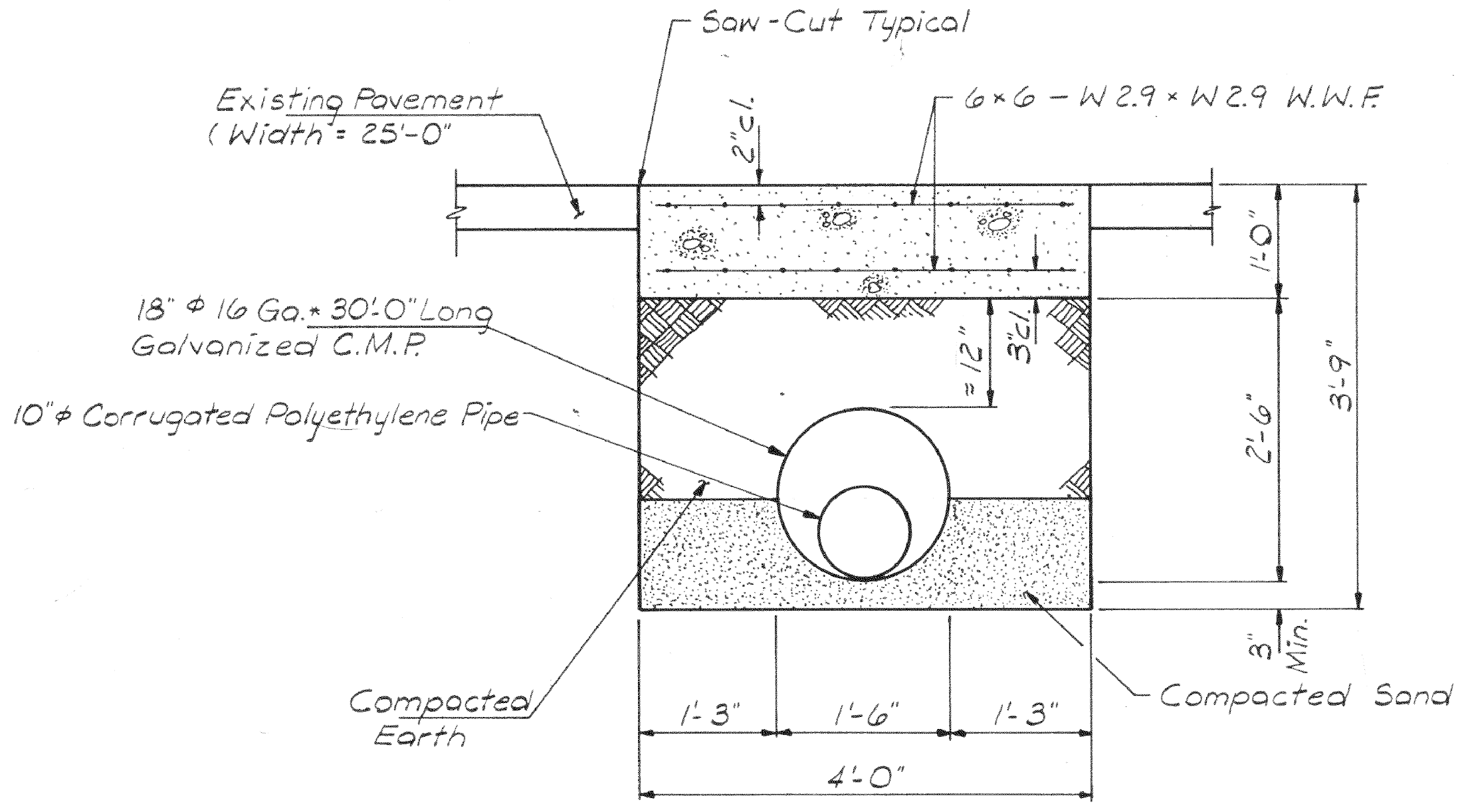

DETAIL ⑦ S-323
Scale: ¾" = 1'-0"

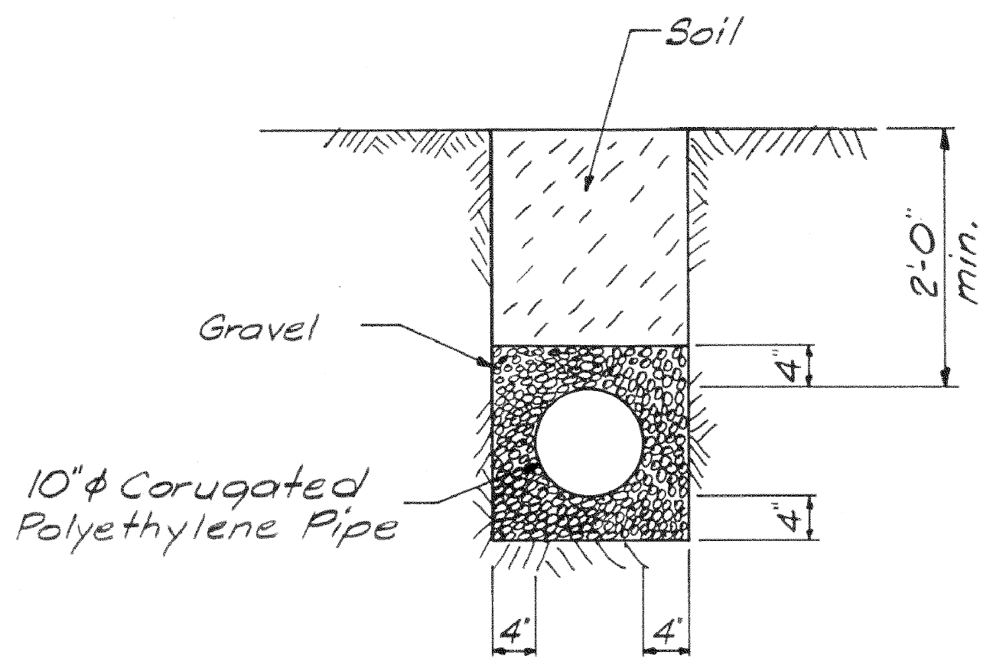

SECTION ⑧ S-323
Scale: ¾" = 1'-0"

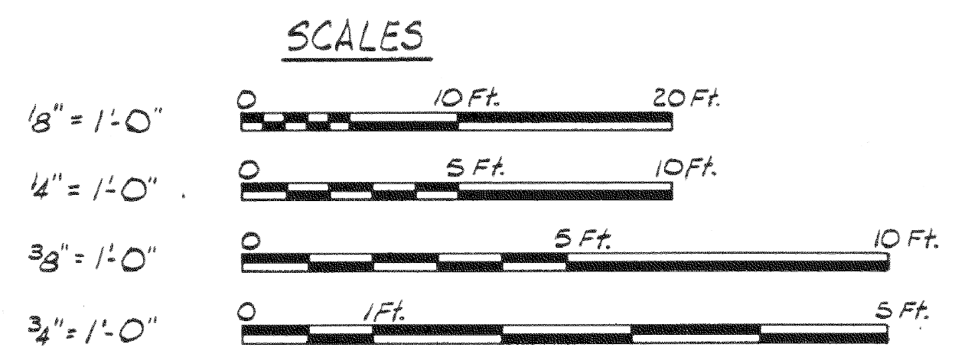

Revised For Contract

OCT 11 1985

DRAWING RECORD				
REV	DATE	REVIEWED	APPROVED	DESCRIPTION
A	4-9-84	T.R.G.	S.A.P.	For Bid Purposes Only 0501-01
B	6-17-85	T.R.G.	S.A.P.	For Bid Purposes Only 0501-01 1985
C	9-16-85	T.R.G.	S.A.P.	For Bid Purposes Only 0501-01 1985
D	10-11-85	T.R.G.	S.A.P.	Revised For Contract 0501-01 1985

DRAWING RECORD				
REV	DATE	REVIEWED	APPROVED	DESCRIPTION

SERGIO A. PECORI

FILE NO. 8453012
SCALE As Shown
DATE April 1984
PCMS No. 0501
DESIGNED TRG
CHECKED
DRAWN R.J.F.
CHECKED TRG

FLY ASH DISPOSAL POND
DETAILS AND SECTIONS
HUTSONVILLE POWER STATION
CENTRAL ILLINOIS PUBLIC SERVICE CO.

HANSON ENGINEERS INCORPORATED
SPRINGFIELD, IL • PEORIA, IL • ROCKFORD, IL

DRAWING NO. S-323
SHEET __ OF __
REV D

REV. NO. | DESCRIPTION | BY | DATE

NOTE:
IMAGE HAS BEEN REDUCED AND IS NO LONGER TO A SCALE

GZA GeoEnvironmental, Inc.
20900 Swenson Drive ■ Waukesha, Wisconsin 53186
Phone (262) 754-2560 ■ Fax (262) 754-9711
www.gza.com

PROJ MGR: DPS
DESIGNED BY: DPS
REVIEWED BY: PJH
OPERATOR: CLK
DATE: 10-24-2011

HUTSONVILLE POWER STATION
15142 EAST 1900th AVENUE
HUTSONVILLE, ILLINOIS

POND A
ADDITIONAL SECTIONS

JOB NO. 01.0170142.30

FIGURE NO. 6

GZA Drawing Name: J:\GZA_USA#\01.0170142.30 Ash Imp. Round 10\01.0170142.30 Task 9 - Hutsonville\Drawings\Autocad\Scanned Figures - Hutsonville.dwg Last Modified: Oct 24, 2011 - 1:23pm Plotted on: Nov 10, 2011 - 9:33am by justin.hegarty

S-325

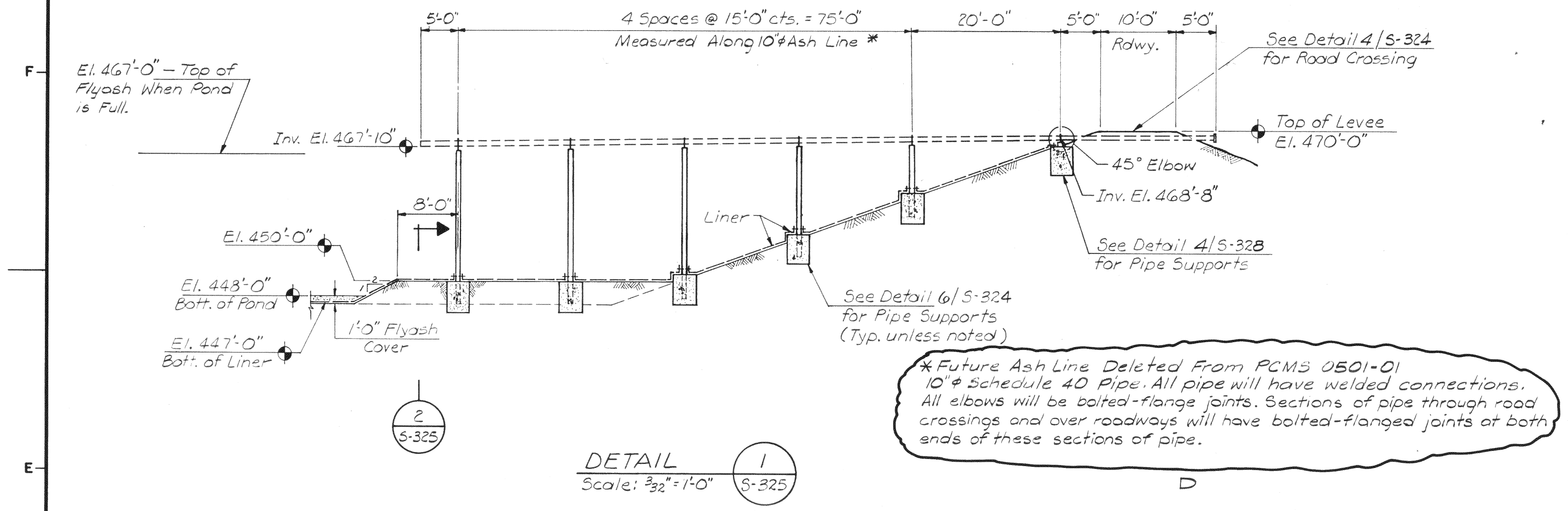

DETAIL 1 / S-325
Scale: 3/32" = 1'-0"

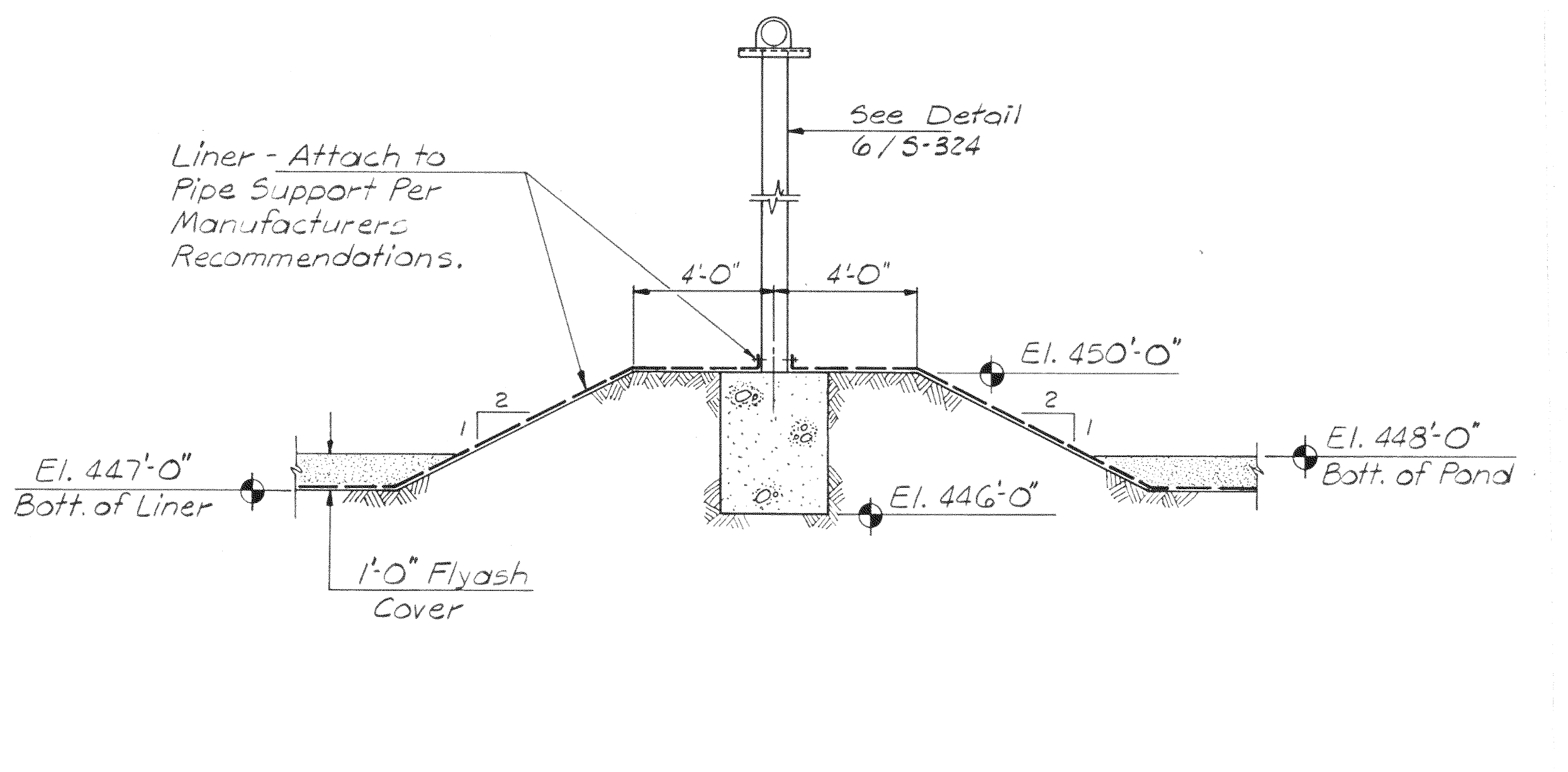

SECTION 2 / S-325
Scale: 1/4" = 1'-0"

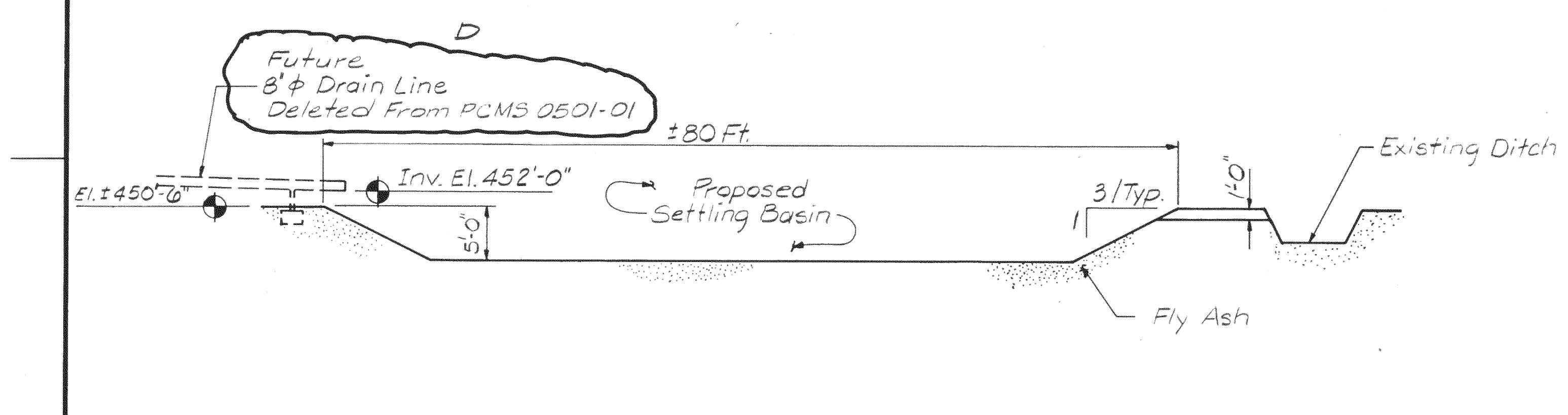

SECTION 3 / S-325
Scale: 3/32" = 1'-0"

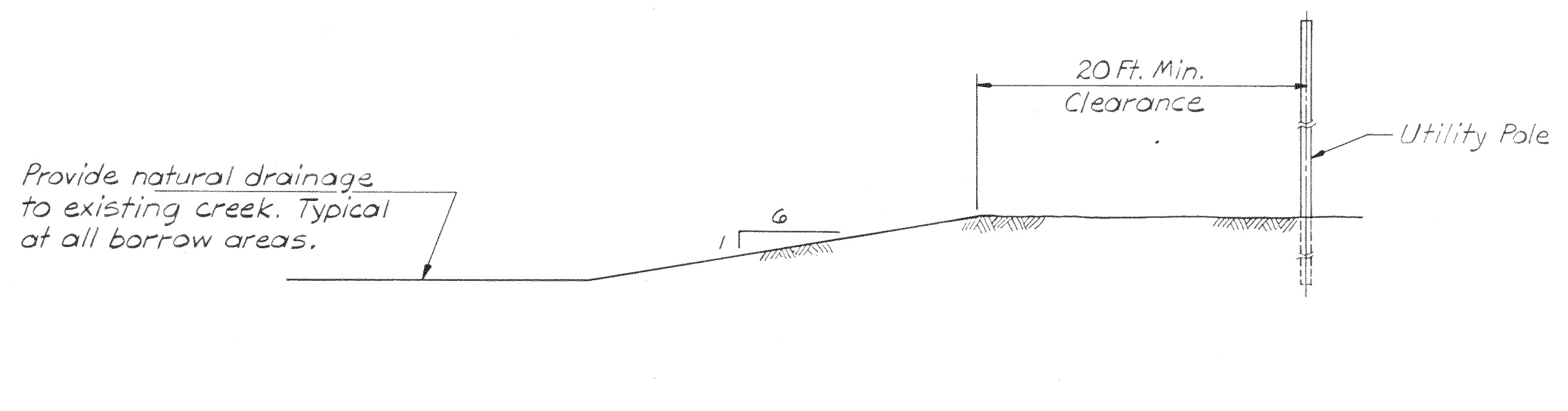

SECTION 4 / S-325
Scale: 1/8" = 1'-0"

NOTE: DELETED FROM PCMS 0501-01

GENERAL NOTES

1. THE CONTRACTOR SHALL FIELD VERIFY ALL DIMENSIONS AND EXISTING CONDITIONS PRIOR TO CONSTRUCTION. NOTIFY THE OWNER'S REPRESENTATIVE OF ANY DISCREPANCY IMMEDIATELY.
2. ALL FOOTING EXCAVATIONS SHALL BE CLEAN AND FREE OF DEBRIS, STANDING WATER, AND LOOSE SOIL PRIOR TO PLACEMENT OF CONCRETE; AND SHALL BE INSPECTED AND APPROVED BY THE OWNER'S REPRESENTATIVE PRIOR TO PLACEMENT OF CONCRETE.
3. ALL CONCRETE SHALL HAVE A MINIMUM 28 DAY COMPRESSIVE STRENGTH OF 3,500 PSI.
4. ALL REINFORCEMENT BARS SHALL CONFORM TO ASTM-A615, GRADE 60.
5. ALL REINFORCEMENT BARS SHALL BE FABRICATED IN ACCORDANCE WITH THE LATEST ACI MANUAL OF STANDARD PRACTICE FOR DETAILING REINFORCED CONCRETE STRUCTURES, AND SHALL BE CLEAN AND FREE OF GREASE AND SCALING RUST.
6. ALL WELDED WIRE FABRIC SHALL CONFORM TO ASTM-A185.
7. ALL GROUT REQUIRED TO SEAL MANHOLES, ETC. SHALL BE U.S. GROUT CORPORATIONS FIVE STAR NON-SHRINK GROUT OR EQUAL AND SHALL BE INSTALLED ACCORDING TO THE MANUFACTURER'S SPECIFICATIONS.
8. ALL EXPOSED CONCRETE EDGES SHALL BE CHAMFERED 1" UNLESS OTHERWISE NOTED.
9. ALL STRUCTURAL STEEL SHALL CONFORM TO ASTM A36.
10. ALL WELDS SHALL BE MADE WITH E70XX ELECTRODES AND SHALL CONFORM TO AWS SPECIFICATIONS.
11. CONNECTIONS NOT DETAILED ON THE PLANS SHALL BE SELECTED IN ACCORDANCE WITH AISC SPECIFICATIONS.
12. ALL ANCHOR BOLTS SHALL CONFORM TO ASTM A307.
13. ALL BOLTS SHALL CONFORM TO ASTM A325.
14. THE HANDRAIL SHALL BE 1 1/2 IN. DIAMETER SCHEDULE 40 C.S. PIPE ALL WELDS SHALL BE GROUND SMOOTH.
15. THE 10 IN. DIAMETER ASH LINE PIPE SHALL BE SCHEDULE 40 C.S. PIPE. DRESSER COUPLERS SHALL BE PLACED AT 40 FT MAXIMUM ON CENTER. ALL OTHER JOINTS SHALL BE WELDED UNLESS SHOWN OTHERWISE ON THE DRAWINGS AS BOLTED-FLANGED CONNECTIONS SHALL BE SLIP ON FLANGES WITH FRONT AND BACK FACES WELDED TO PIPE OR FORGED FLANGE TYPE. ALL ELBOWS SHALL BE BOLTED-FLANGED. SECTIONS OF PIPE THROUGH ROAD CROSSINGS SHALL HAVE BOLTED-FLANGED JOINTS AT BOTH ENDS.

D

16. THE 10" DIAMETER FIELD DRAINAGE PIPE SHALL BE NON-PEFORATED CORRUGATED POLYETHYLENE TUBING MEETING THE REQUIREMENT OF ASTM F-67, AS MANUFACTURED BY ADVANCED DRAINAGE SYSTEMS, INC. OR APPROVED EQUAL COUPLING SHALL BE SNAP TYPE.
17. THE LEVEE ACCESS ROAD MATERIALS SHALL BE CRUSHED LIMESTONE AND MEET THE REQUIREMENTS FOR IDOT CA-6 AND HAVING THE FOLLOWING GRADATION:

1 1/2"	100%
1"	95 ± 5%
1/2"	75 ± 5%
No. 4	43 ± 13%
No. 16	25 ± 15%
No. 200	8 ± 4%

18. ALL CORRUGATED METAL PIPE SHALL BE GALVANIZED, THE SIZE SHOWN ON THE DRAWINGS, AND CONSTRUCTED IN ACCORDANCE WITH IDOT STANDARD SPECIFICATIONS FOR ROAD ND BRIDGE CONSTRUCTION SECTION 511.
19. ALL MANHOLES SHALL BE PRECAST-REINFORCED CONCRETE, THE SIZE SHOWN ON THE DRAWINGS, AND CONSTRUCTED IN ACCORDANCE WITH IDOT STANDARD SPECIFICATIONS FOR ROAD AND BRIDGE CONSTRUCTION SECTION 612.
20. 4 IN. HEAVY DUTY GRATING SHALL BE DESIGNED IN ACCORDANCE WITH AASHTO SPECIFICATIONS TO SUPPORT A HS-20 TRUCK. 1 1/2 IN. GRATING SHALL BE DESIGNED TO SAFELY SUPPORT A UNIFORM LIVE LOAD OF $100\#/FT^2$. GALVANIZE ALL GRATING.

SCALES

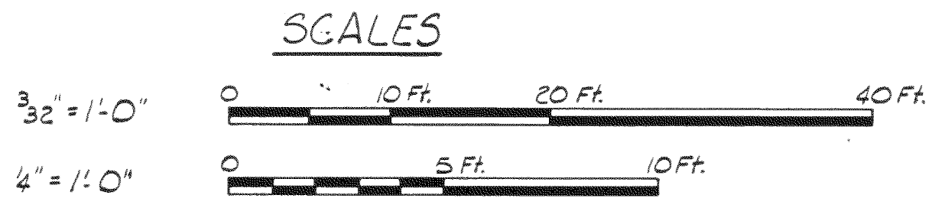

Revised For
Contract
OCT 11 1985

DRAWING RECORD

REV	DATE	REVIEWED	APPROVED	DESCRIPTION
A	4-9-84	T.R.G.	S.A.P.	For Bid Purposes Only 0501-01
B	6-12-85	T.R.G.	S.A.P.	For Bid Purposes Only 0501-01 1985
C	9-16-85	T.R.G.	S.A.P.	For Bid Purposes Only 0501-01 1985
D	10-11-85	T.R.G.	S.A.P.	Revised For Contract 0501-01 1985

DRAWING RECORD

REV	DATE	REVIEWED	APPROVED	DESCRIPTION

SERGIO A. PECORA 35798 REGISTERED PROFESSIONAL ENGINEER OF ILLINOIS

FILE NO. 8453012
DATE April 1984
DESIGNED TRG
CHECKED
DRAWN D.A.N.
CHECKED TRG
SCALE As Shown
PCMS No. 0501

FLY ASH DISPOSAL POND
DETAILS AND SECTIONS
HUTSONVILLE POWER STATION
CENTRAL ILLINOIS PUBLIC SERVICE CO.

HANSON ENGINEERS INCORPORATED
SPRINGFIELD, IL • PEORIA, IL • ROCKFORD, IL

DRAWING NO. S-325
REV D
SHEET __ OF __

REV. NO.	DESCRIPTION	BY	DATE

NOTE:
IMAGE HAS BEEN REDUCED AND IS NO LONGER TO A SCALE

GZA
GeoEnvironmental, Inc.
20900 Swenson Drive ■ Waukesha, Wisconsin 53186
Phone (262) 754-2560 ■ Fax (262) 754-9711
www.gza.com

PROJ MGR: DPS
DESIGNED BY: DPS
REVIEWED BY: PJH
OPERATOR: CLK
DATE: 10-24-2011

HUTSONVILLE POWER STATION
15142 EAST 1900th AVENUE
HUTSONVILLE, ILLINOIS

POND A
ADDITIONAL DETAILS

JOB NO.
01.0170142.30

FIGURE NO.
7

GZA Drawing Name: J:\GZA_USA#\01.0170142.30 Ash Imp. Round 10\01.0170142.30 Task 9 – Hutsonville\Drawings\Autocad\Scanned Figures – Hutsonville.dwg Last Modified: Oct 24, 2011 – 1:23pm Plotted on: Nov 10, 2011 – 9:33am by justin.hegarty

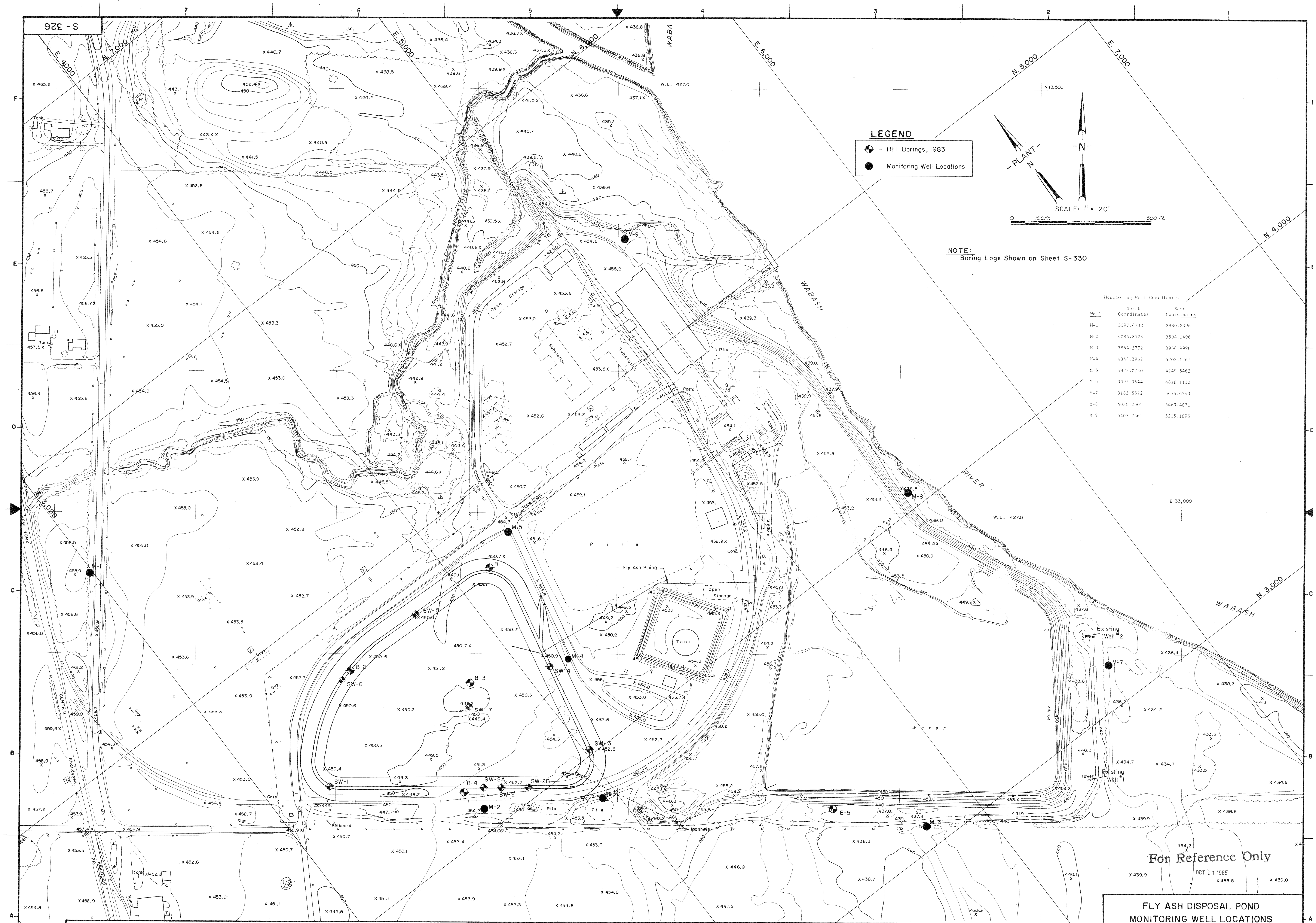

NOTE:
Boring Logs Shown on Sheet S-330

Monitoring Well Coordinates

Well	North Coordinates	East Coordinates
M-1	5597.4730	2980.2396
M-2	4086.8523	3594.0496
M-3	3864.5772	3956.9996
M-4	4344.3952	4202.1265
M-5	4822.0730	4249.5462
M-6	3095.3644	4818.1132
M-7	3165.5572	5674.6343
M-8	4080.2501	5469.4871
M-9	5407.7561	5205.1895

For Reference Only
OCT 11 1985

DRAWING RECORD

REV	DATE	REVIEWED	APPROVED	DESCRIPTION
A	4-9-84	T.R.G.	S.A.P.	For Bid Purposes Only 0501-01
B	10-1-84		S.A.P.	Added SW Boring Locations

REV	DATE	REVIEWED	APPROVED	DESCRIPTION

SERGIO A. PECORI
35798
REGISTERED PROFESSIONAL ENGINEER OF ILLINOIS
Sergio Pecori

FILE NO. 84 S 3012
DATE April, 1984
DESIGNED
CHECKED
DRAWN WWM
CHECKED SAP
*SCALE As Shown
PCMS No. 0501

FLY ASH DISPOSAL POND
MONITORING WELL LOCATIONS
HUTSONVILLE POWER STATION
CENTRAL ILLINOIS PUBLIC SERVICE CO.

HANSON ENGINEERS INCORPORATED
SPRINGFIELD, IL • PEORIA, IL • ROCKFORD, IL

DRAWING NO. S - 326
REV B
SHEET __ OF __

REV. NO. | DESCRIPTION | BY | DATE

NOTE:
IMAGE HAS BEEN REDUCED AND IS NO LONGER TO A SCALE

GZA
GeoEnvironmental, Inc.
20900 Swenson Drive ■ Waukesha, Wisconsin 53186
Phone (262) 754-2560 ■ Fax (262) 754-9711
www.gza.com

PROJ MGR: DPS
DESIGNED BY: DPS
REVIEWED BY: PJH
OPERATOR: CLK
DATE: 10-24-2011

HUTSONVILLE POWER STATION
15142 EAST 1900th AVENUE
HUTSONVILLE, ILLINOIS

MONITORING WELL LOCATIONS

JOB NO.
01.0170142.30

FIGURE NO.
8

GZA Drawing Name: J:\GZA_USA#\01.0170142.30 Ash Imp. Round 10\01.0170142.30 Task 9 - Hutsonville\Drawings\Autocad\Scanned Figures - Hutsonville.dwg Last Modified: Oct 24, 2011 - 1:23pm Plotted on: Nov 10, 2011 - 9:34am by justin.hegarty

PAGE NO.

SURVEY CONTROL POINTS			
POINT NO.	NORTHING	EASTING	ELEVATION
POLE 501	4837.64	4985.77	
POLE 502	4819.22	4703.83	
TARGET 102	4841.54	4339.95	455.69
TARGET 103	4582.89	4237.96	453.35
TARGET 105	4295.28	4865.82	453.02
TARGET 106	4707.90	5011.67	453.68

DESIGN COORDINATE POINTS		
POINT NO.	NORTHING	EASTING
100	4144.64	4055.13
101	3990.48	4297.12
102	3984.03	4311.07
103	3905.12	4566.83
104	3869.38	4682.69
105	3781.67	4598.97
106	3602.43	4427.87
107	3580.22	4361.37
108	3600.78	4237.18
109	3616.13	4202.67
110	3680.27	4122.25
111	3701.86	4103.80
112	3932.24	3972.91
113	3988.00	4658.80
114	4353.05	4983.91
115	4358.92	5004.54
116	4340.64	5066.10
117	4309.05	5076.08
118	4058.73	4877.72
119	3929.11	4754.53
120	3924.93	4731.24
121	3939.86	4700.75
122	4571.60	5286.74
123	4344.17	5099.26
124	4459.25	5131.30
125	4355.87	5089.41
126	4400.35	4953.68
127	4223.75	4791.03
128	3969.54	4684.27
129	3944.07	4656.79
130	3862.45	4568.72
131	3874.25	4199.75
132	3818.24	4269.65
133	3812.31	4278.67
134	3771.46	4355.72
135	3766.08	4370.40
136	3732.49	4524.37
137	3991.19	3950.25
138	3964.77	3983.66
139	3616.83	4394.00
140	3503.72	4474.24
141	2930.56	5219.74
142	2927.64	5281.97
143	2956.89	5331.72
144	3398.25	5639.51

HEI SHEET NO.
S02A

SITE LAYOUT PLAN
INTERIM ASH AND DRAINAGE COLLECTION PONDS
HUTSONVILLE, ILLINOIS

HUTSONVILLE POWER STATION
UNIT NO.

Ameren CIPS

HANSON ENGINEERS INCORPORATED

Ameren CIPS DRAWING NUMBER: S376
REV.: 0
PAGE NO. 0

SCALE: 1"=100'
P.C.M.S PROJECT
DRAFTER: EJM
DATE: 5/22/00

DRAWING RECORD

REV.	DATE	APPROVED	DESCRIPTION	REV.	DATE	APPROVED	DESCRIPTION

REV. NO.	DESCRIPTION	BY	DATE

NOTE:
IMAGE HAS BEEN REDUCED AND IS NO LONGER TO A SCALE

GZA
GeoEnvironmental, Inc.
20900 Swenson Drive ■ Waukesha, Wisconsin 53186
Phone (262) 754-2560 ■ Fax (262) 754-9711
www.gza.com

PROJ MGR: DPS
DESIGNED BY: DPS
REVIEWED BY: PJH
OPERATOR: CLK

DATE: 10-24-2011

HUTSONVILLE POWER STATION
15142 EAST 1900th AVENUE
HUTSONVILLE, ILLINOIS

POND B & POND C
PLAN OF DESIGN

JOB NO.
01.0170142.30

FIGURE NO.
9

GZA Drawing Name: J:\GZA_USA\01.0170142.30 Amp. Round 10\01.0170142.30 Task 9 - Hutsonville\Drawings\Autocad\Scanned Figures - Hutsonville.dwg Last Modified: Oct 24, 2011 - 1:23pm Plotted on: Nov 10, 2011 - 9:34am by justin.hegarty

PAGE NO.

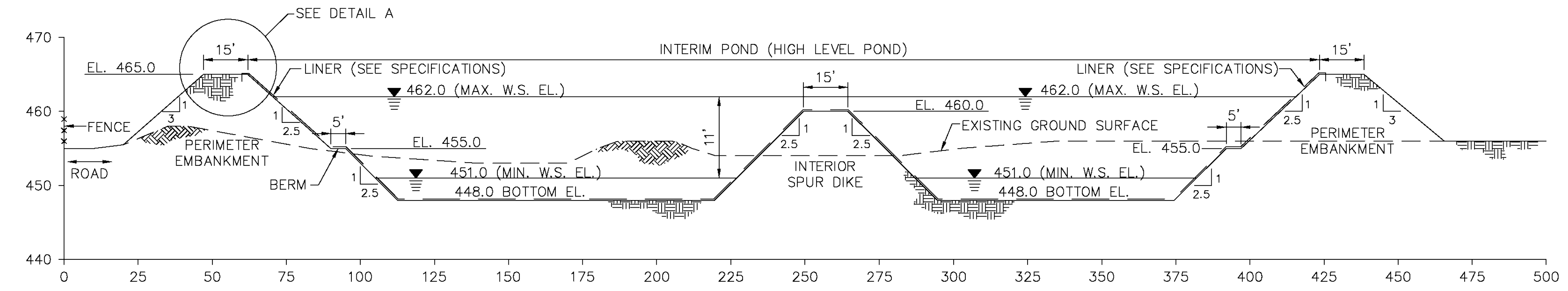

1/S02 INTERIM POND SECTION

HORIZONTAL SCALE: 1"=25'-0"

VERTICAL SCALE: 1"=5'-0"

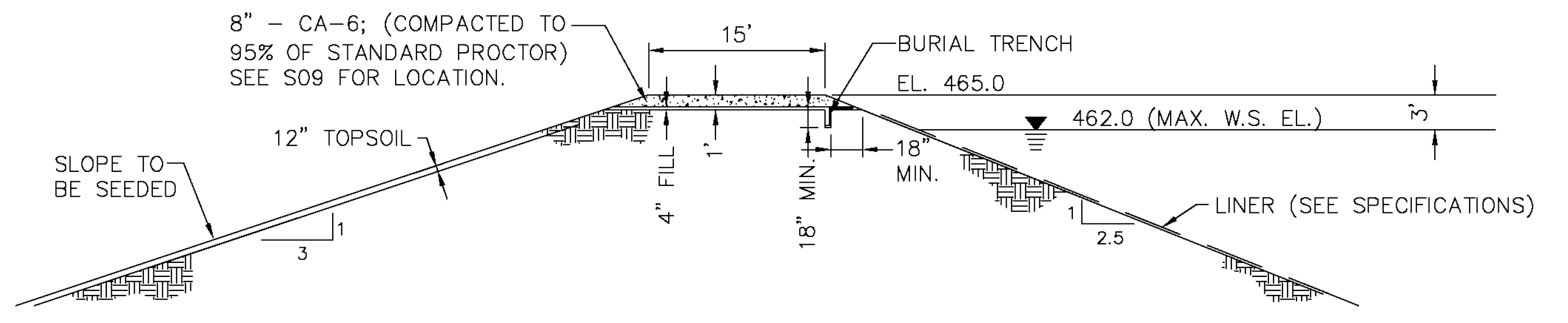

DETAIL A

SCALE: 1"=10'-0"

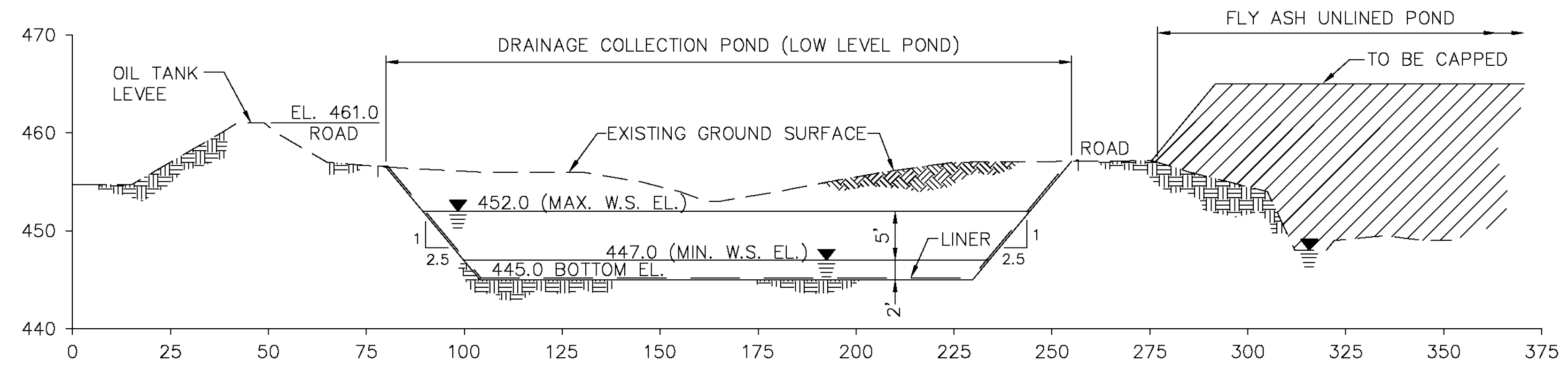

2/S02 DRAINAGE COLLECTION POND SECTION

HORIZONTAL SCALE: 1"=25'-0"

VERTICAL SCALE: 1"=5'-0"

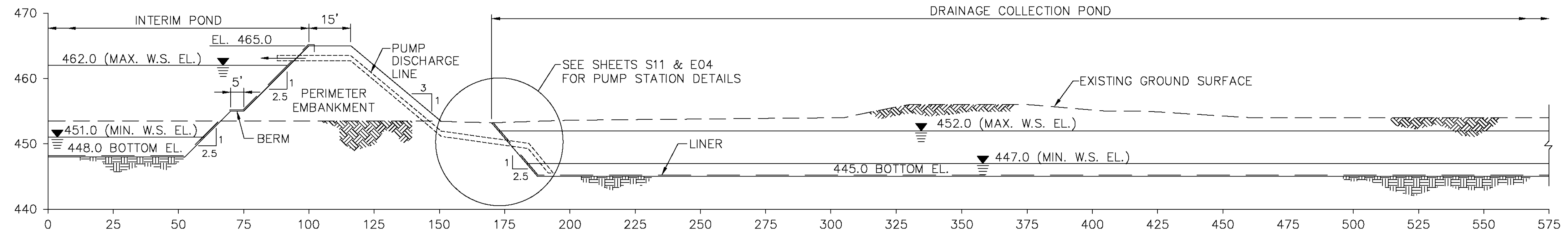

NORTH SECTION

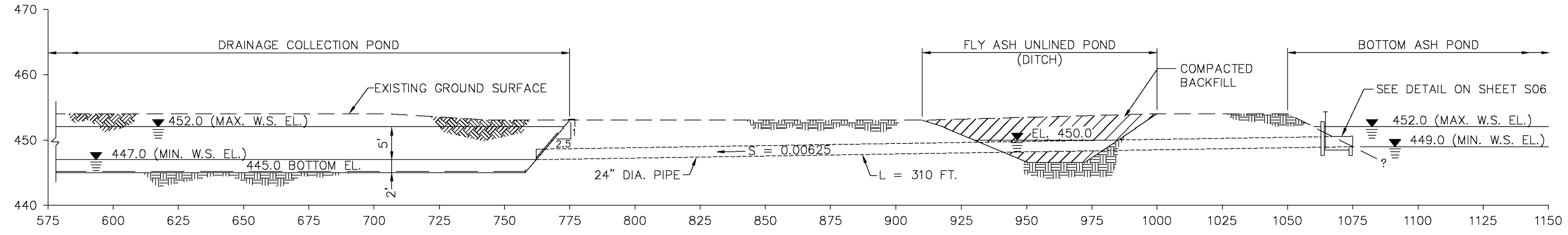

SOUTH SECTION

3/S02 DRAINAGE COLLECTION POND SECTION

HORIZONTAL SCALE: 1"=25'-0"

VERTICAL SCALE: 1"=5'-0"

DRAWING RECORD

REV.	DATE	APPROVED	DESCRIPTION	REV.	DATE	APPROVED	DESCRIPTION

HEI SHEET NO.
S03

TYPICAL SECTIONS
INTERIM ASH AND DRAINAGE COLLECTION PONDS
HUTSONVILLE, ILLINOIS

HUTSONVILLE POWER STATION
UNIT NO.

Ameren CIPS

SCALE
NONE
P.C.M.S PROJECT

DRAFTER
EJM
DATE
5/22/00

HANSON ENGINEERS INCORPORATED

Ameren CIPS DRAWING NUMBER: S367
REV.: 0
PAGE NO. 0

t:\99JOBS\99S3062\S03.DWG 05/23/00 09:13 EJM

REV. NO.	DESCRIPTION	BY	DATE

NOTE:
IMAGE HAS BEEN REDUCED AND IS NO LONGER TO A SCALE

GZA
GeoEnvironmental, Inc.
20900 Swenson Drive ■ Waukesha, Wisconsin 53186
Phone (262) 754-2560 ■ Fax (262) 754-9711
www.gza.com

PROJ MGR: DPS
DESIGNED BY: DPS
REVIEWED BY: PJH
OPERATOR: CLK

DATE: 10-24-2011

HUTSONVILLE POWER STATION
15142 EAST 1900th AVENUE
HUTSONVILLE, ILLINOIS

POND B & POND C
TYPICAL SECTIONS

JOB NO.
01.0170142.30

FIGURE NO.
10

GZA Drawing Name: J:\GZA_USA#\01.0170142.30 Ash Imp. Round 10\01.0170142.30 Task 9 - Hutsonville\Drawings\Autocad\Scanned Figures - Hutsonville.dwg Last Modified: Oct 24, 2011 - 1:23pm Plotted on: Nov 10, 2011 - 9:35am by justin.hegarty

PAGE NO.

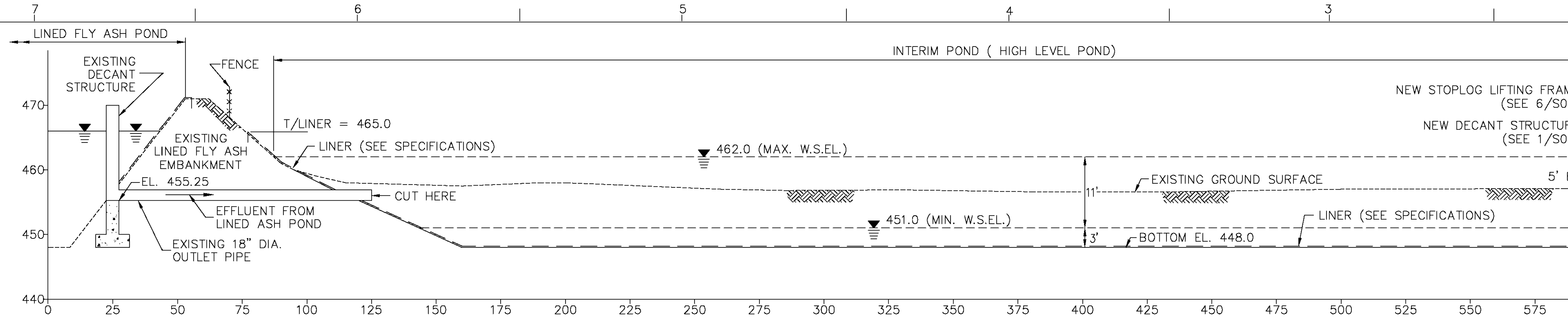

A SECTION S02

HORIZONTAL SCALE: 1"=25'-0"

VERTICAL SCALE: 1"=10'-0"

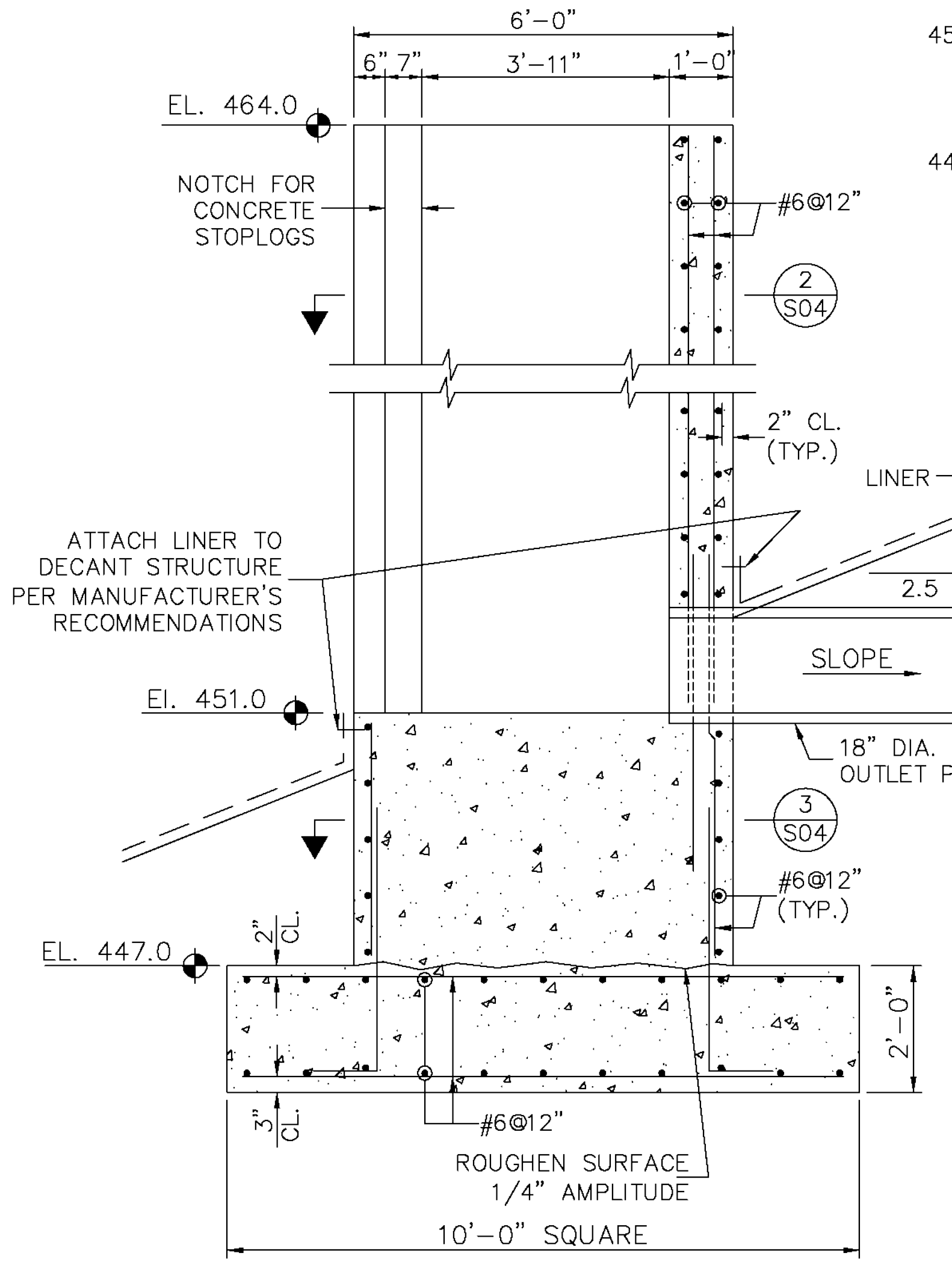

1 SECTION S04 SCALE: 1"=2'-0"

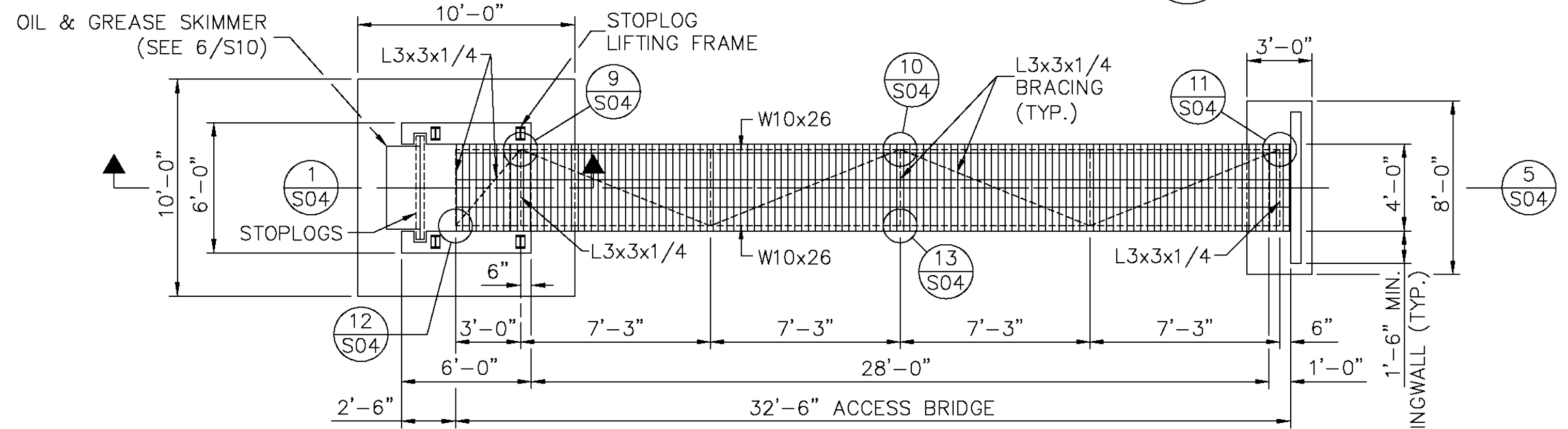

4 DETAIL S04 SCALE: 1"=5'-0"

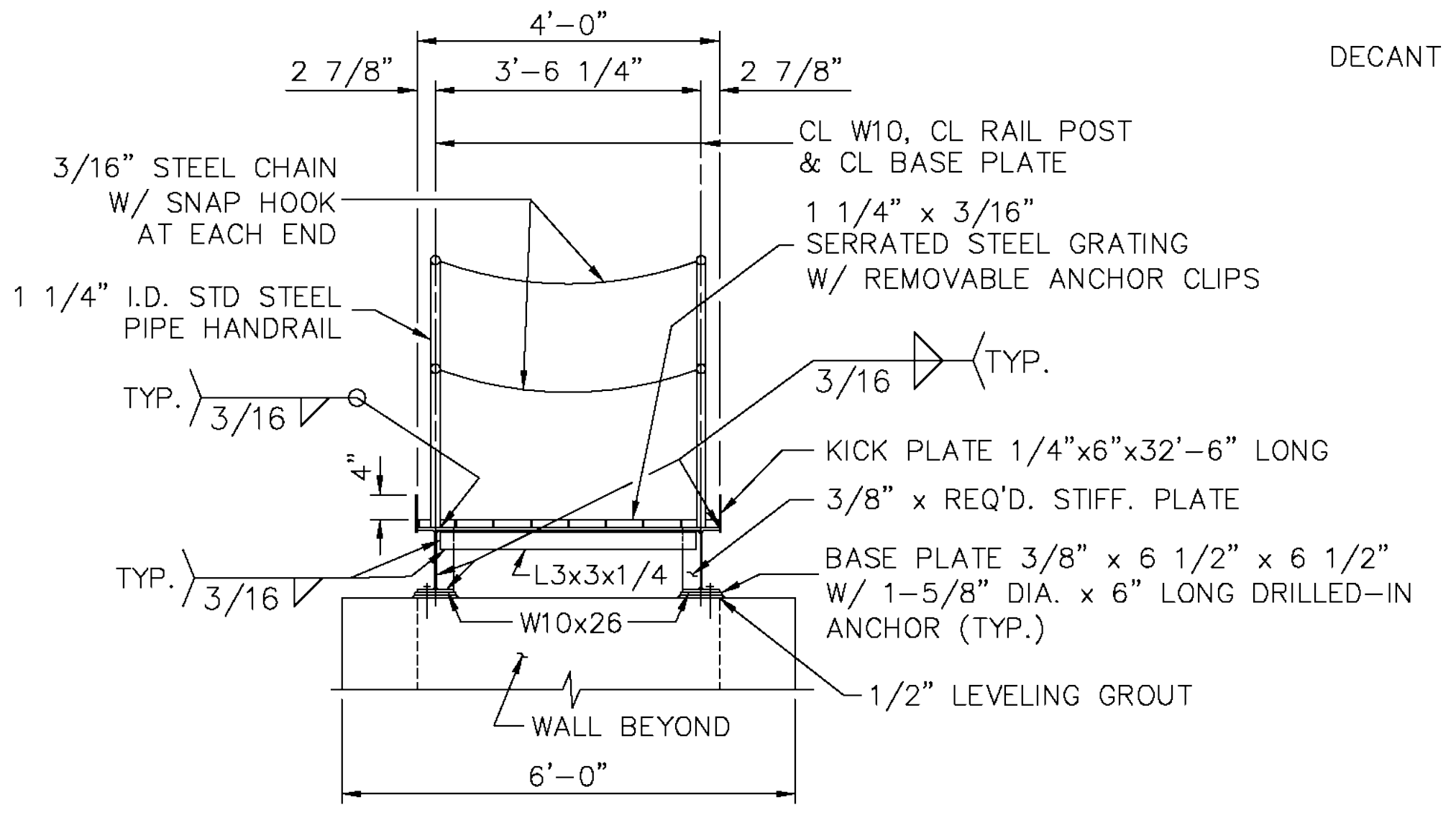

7 SECTION S04 SCALE: 1"=2'-0"

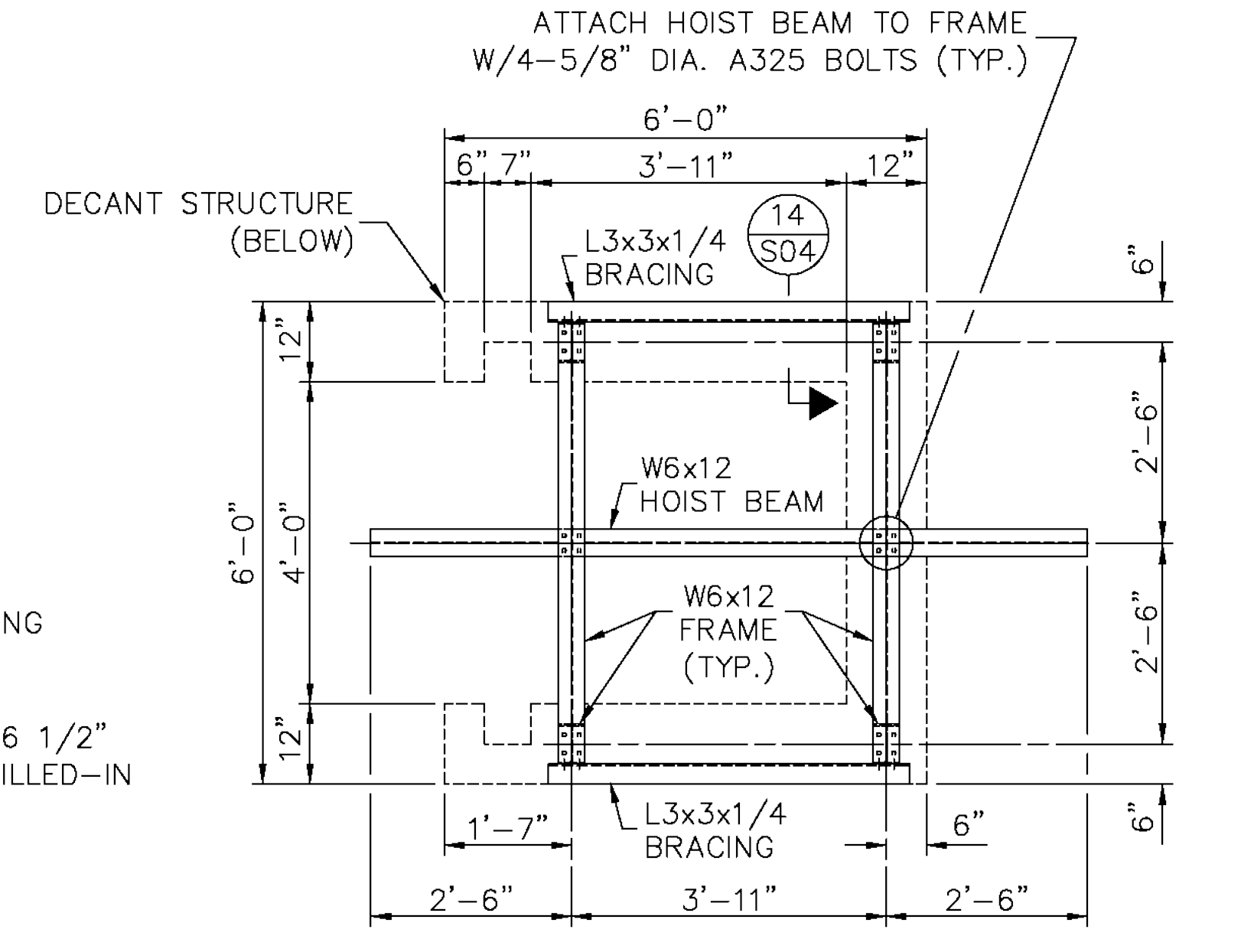

8 DETAIL S04 SCALE: 1"=2'-0"

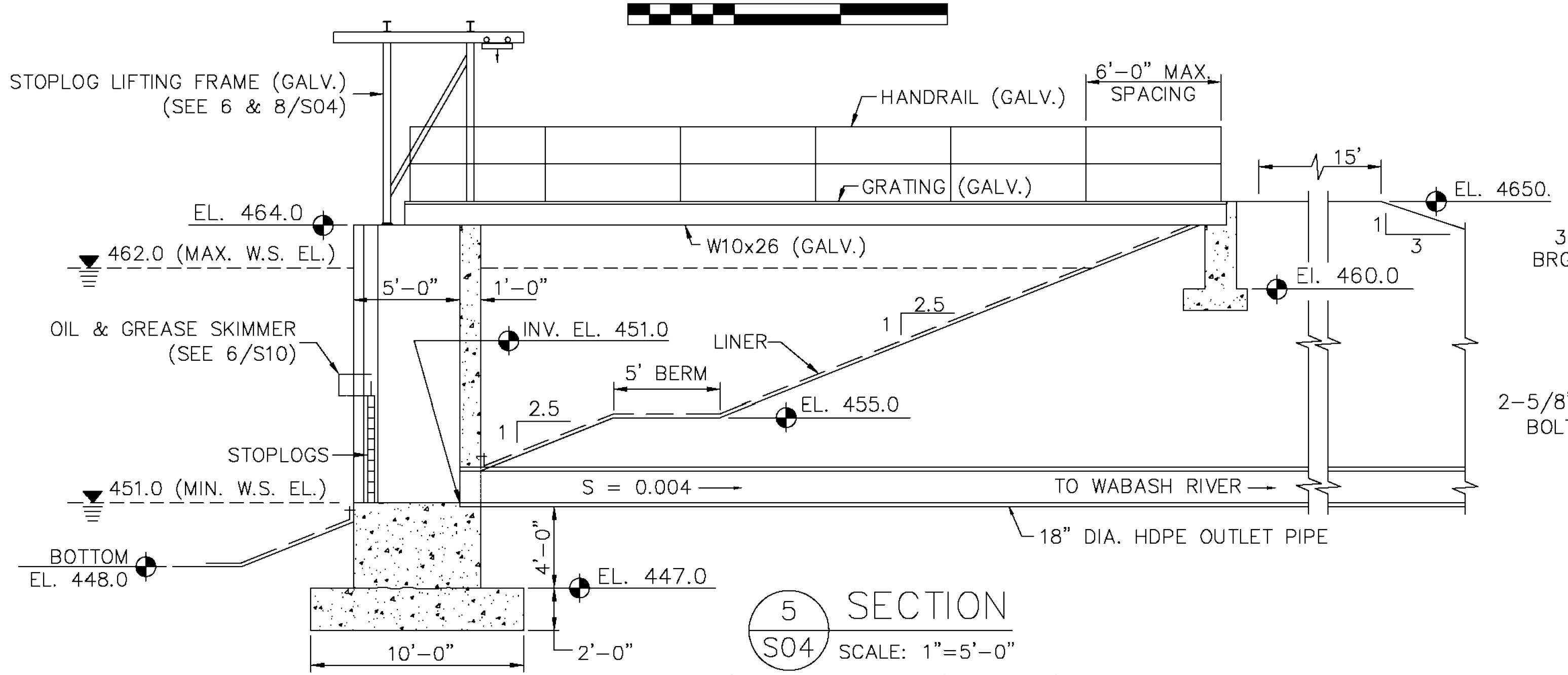

5 SECTION S04 SCALE: 1"=5'-0"

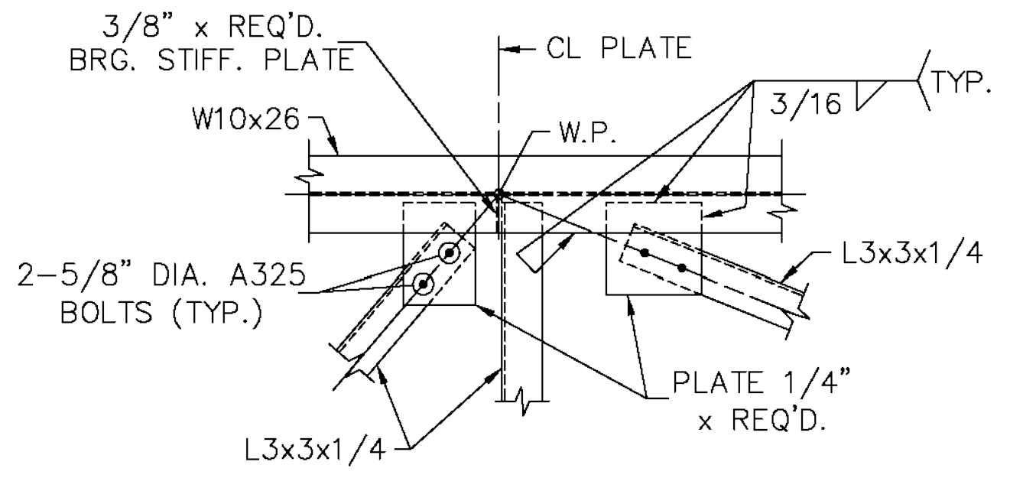

9 DETAIL S04 SCALE: 1"=1'-0"

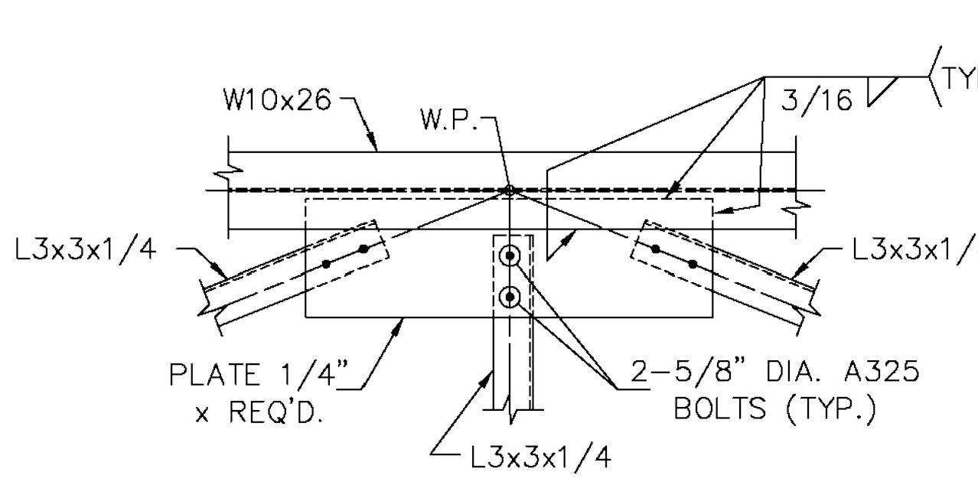

10 DETAIL S04 SCALE: 1"=1'-0"

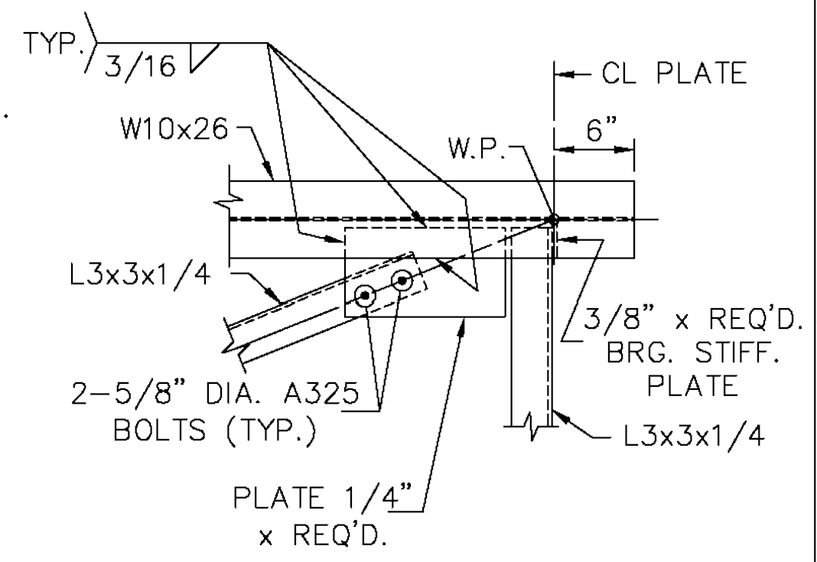

11 DETAIL S04 SCALE: 1"=1'-0"

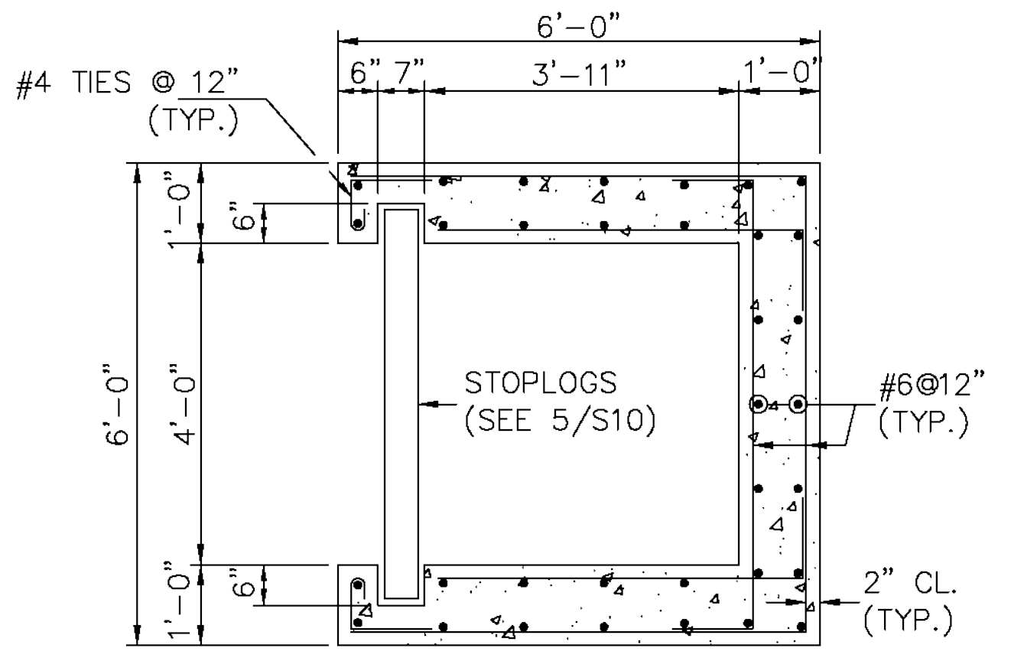

2 SECTION S04 SCALE: 1"=2'-0"

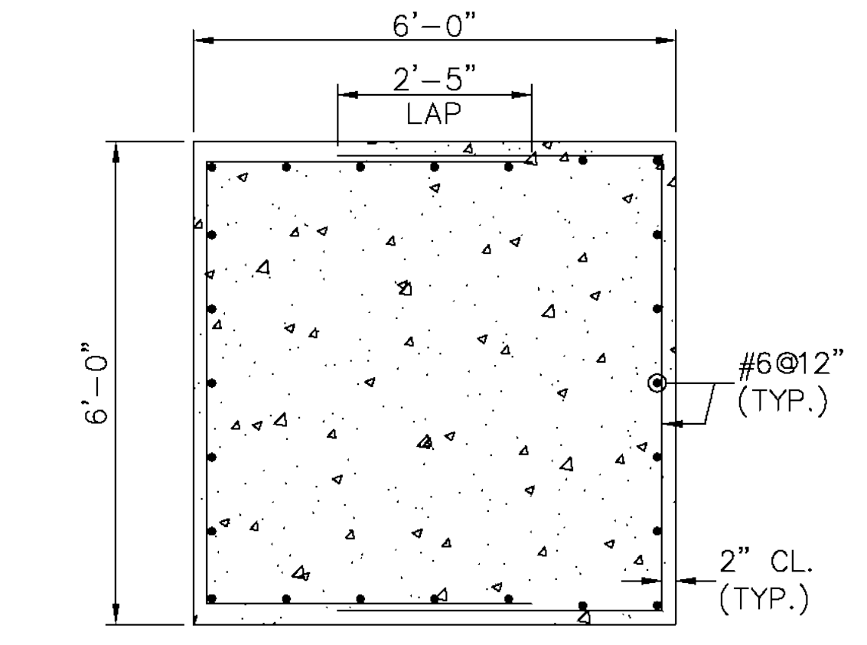

3 SECTION S04 SCALE: 1"=2'-0"

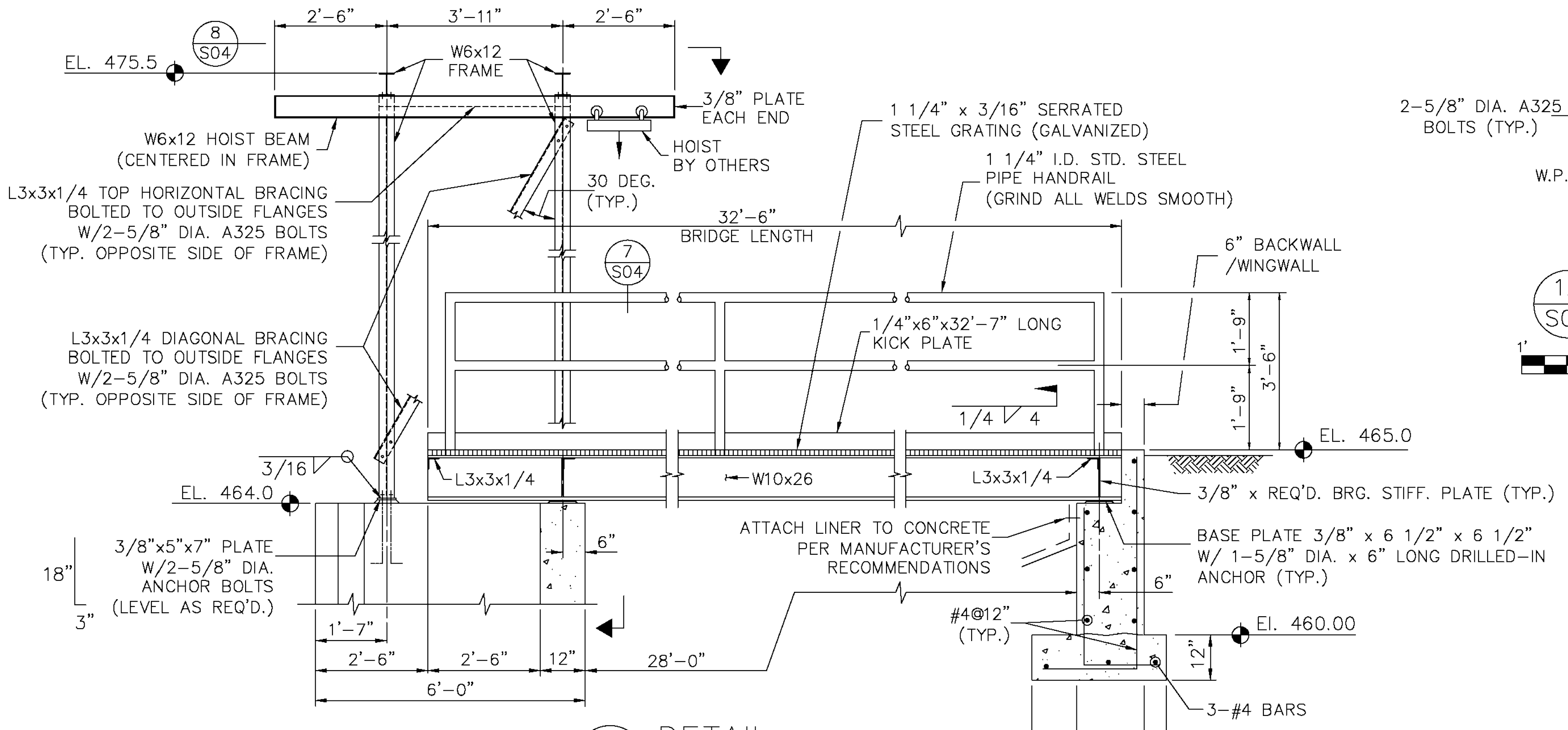

6 DETAIL S04 SCALE: 1"=2'-0"

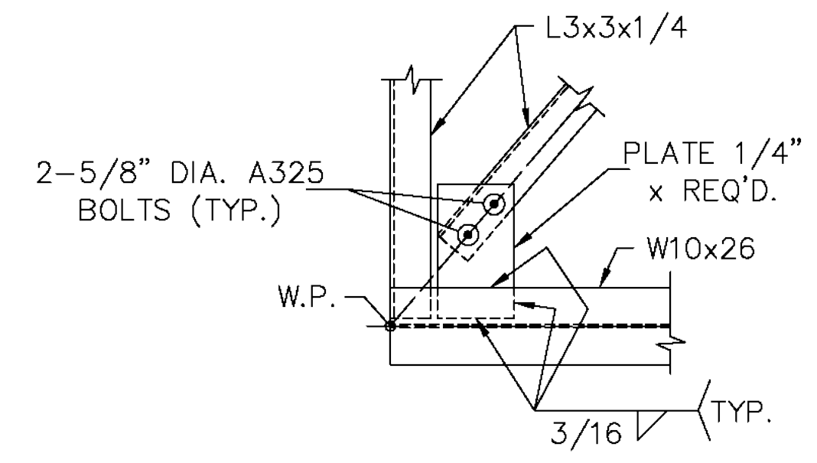

12 DETAIL S04 SCALE: 1"=1'-0"

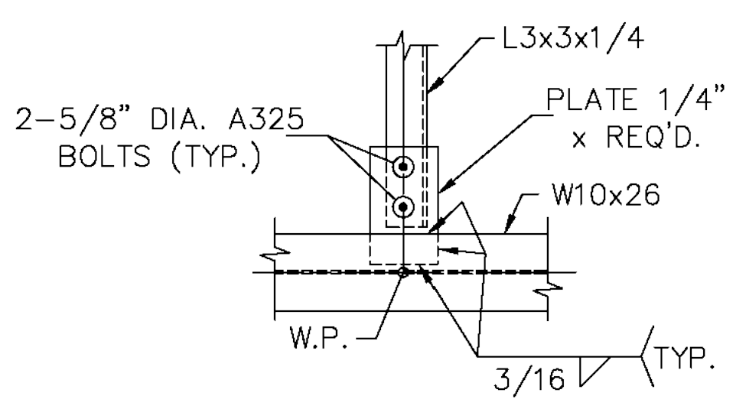

13 DETAIL S04 SCALE: 1"=1'-0"

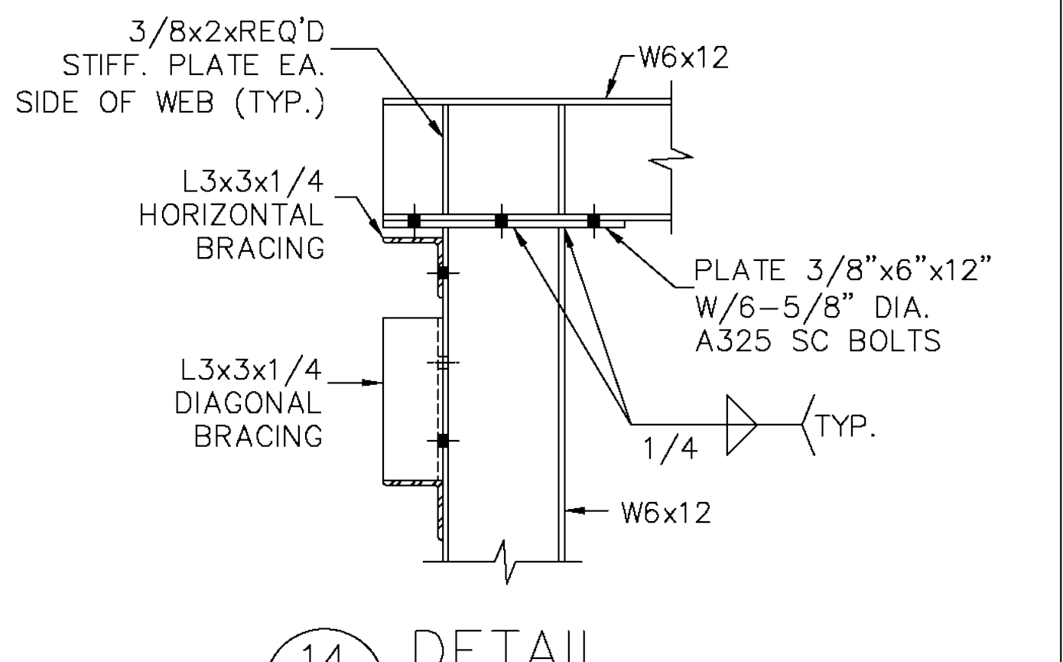

14 DETAIL S04 SCALE: 1 1/2"=1'-0"

SCALE: 1 1/2"=1'-0"

ALL STEEL FRAMING SHALL BE GALVANIZED

HEI SHEET NO.
S04

NEW DECANT STRUCTURE
INTERIM ASH AND DRAINAGE COLLECTION PONDS
HUTSONVILLE, ILLINOIS

HUTSONVILLE POWER STATION
UNIT NO.

Ameren CIPS

DRAWING RECORD

REV.	DATE	APPROVED	DESCRIPTION	REV.	DATE	APPROVED	DESCRIPTION

SCALE NONE
P.C.M.S. PROJECT
DRAFTER DAN
DATE 5/22/00

HANSON ENGINEERS INCORPORATED

Ameren CIPS DRAWING NUMBER S368 REV. 0

PAGE NO. 0

NOTE: IMAGE HAS BEEN REDUCED AND IS NO LONGER TO A SCALE

GZA GeoEnvironmental, Inc.

REV. NO.	DESCRIPTION	BY	DATE

PROJ MGR: DPS
DESIGNED BY: DPS
REVIEWED BY: PJH
OPERATOR: CLK
DATE: 10-24-2011

HUTSONVILLE POWER STATION
15142 EAST 1900th AVENUE
HUTSONVILLE, ILLINOIS

POND B
DECANT STRUCTURE DETAILS

JOB NO.
01.0170142.30

FIGURE NO.
11

PAGE NO.

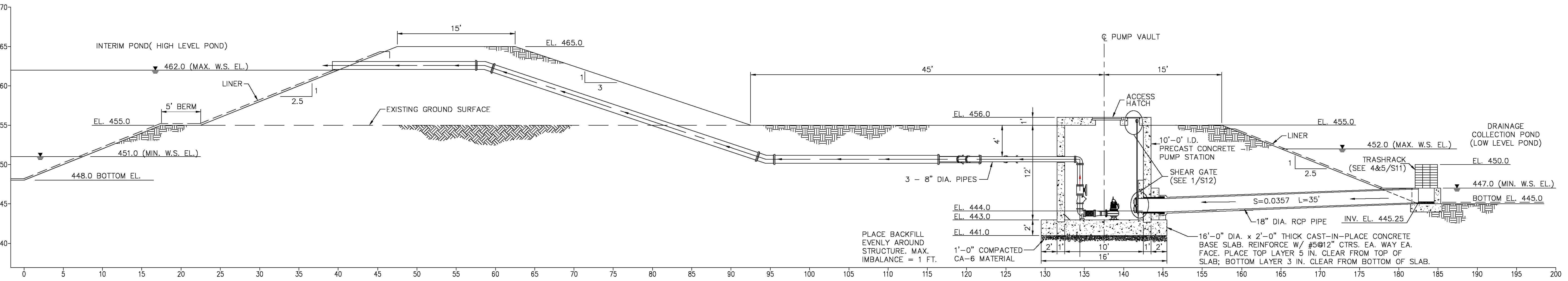

① S11 LONGITUDINAL SECTION-PUMP STATION
SCALE: 1"=5'-0"
5' 0 5' 10'

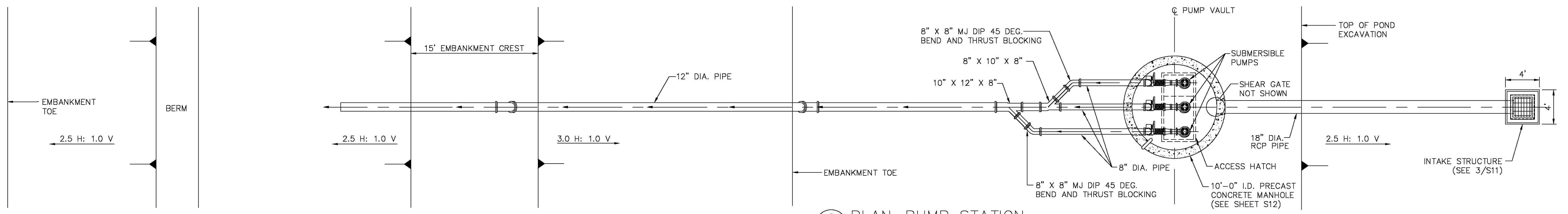

② S11 PLAN-PUMP STATION
SCALE: 1"=5'-0"
5' 0 5' 10'

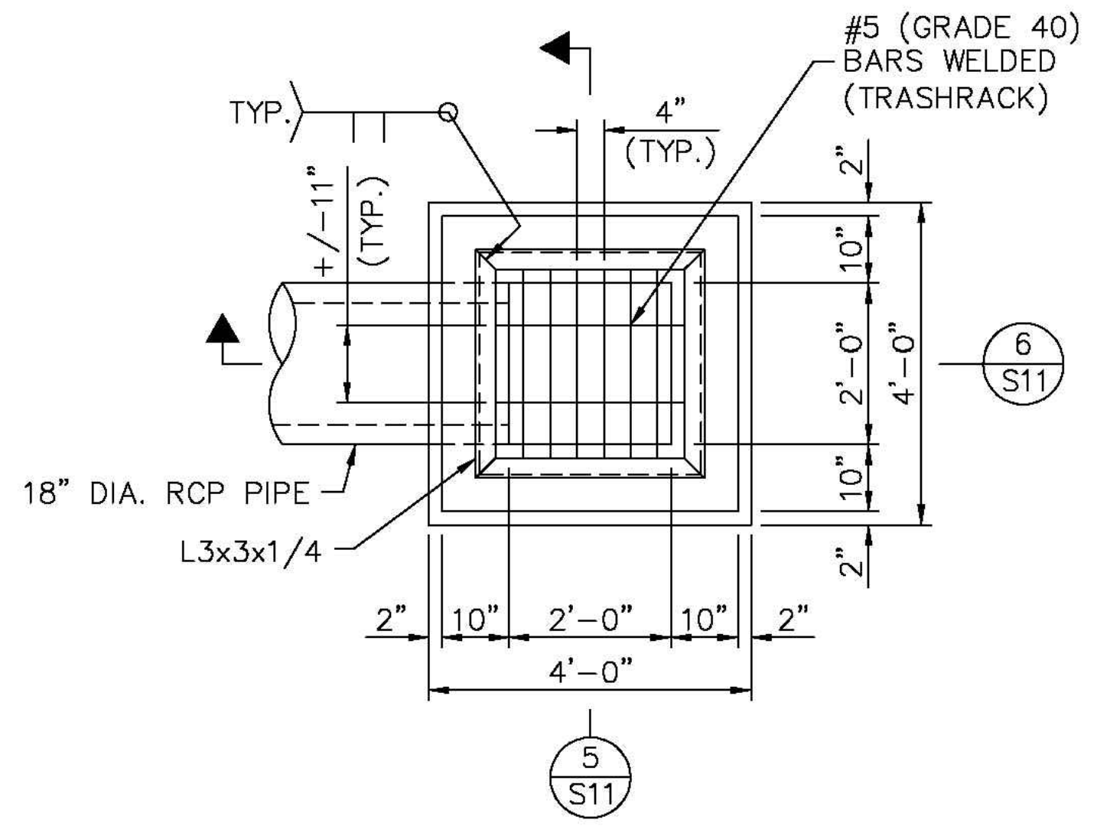

NOTE: ALL TRASHRACK STEEL SHALL BE GALVANIZED

③ S11 PLAN-INTAKE STRUCTURE
SCALE: 1"=2'-0"
2' 1' 0 2' 4'

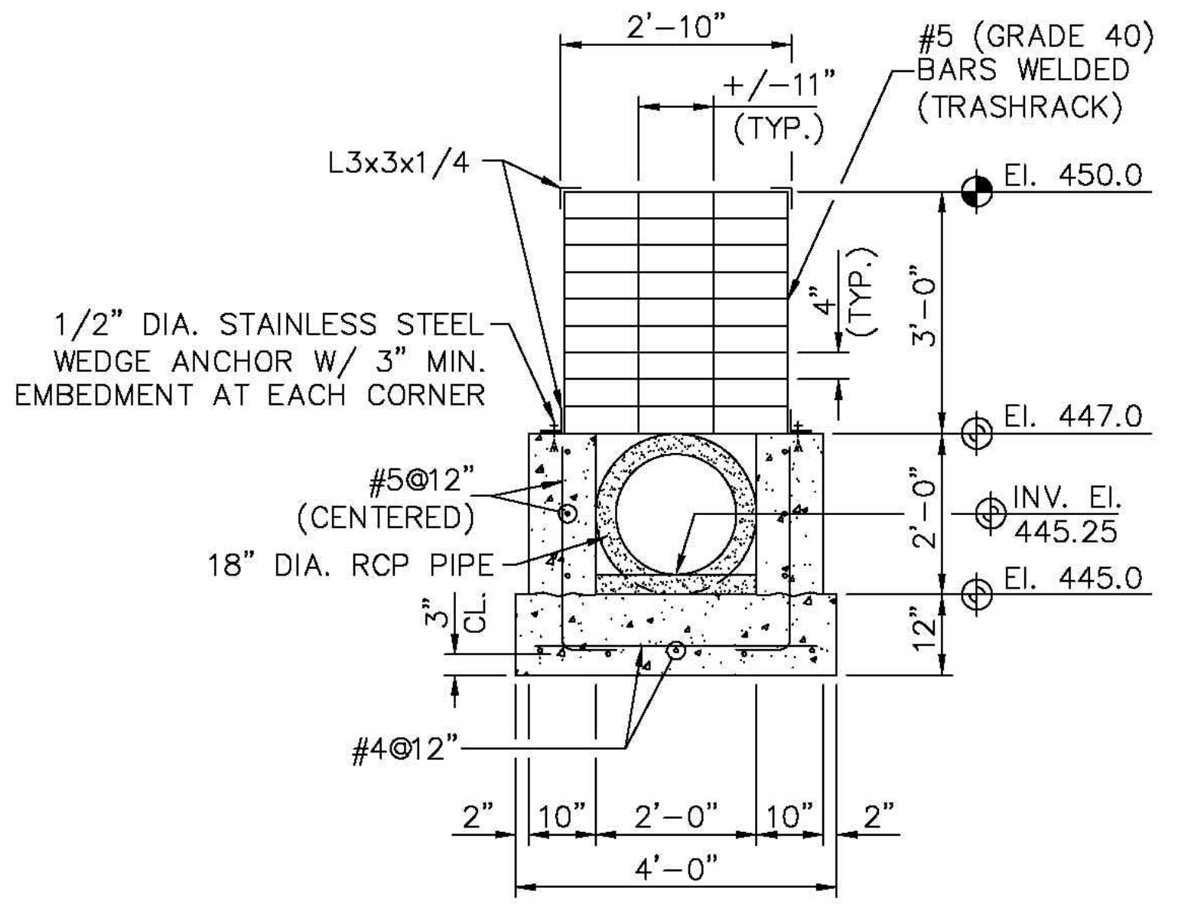

④ S11 SECTION
SCALE: 1"=2'-0"
2' 1' 0 2' 4'

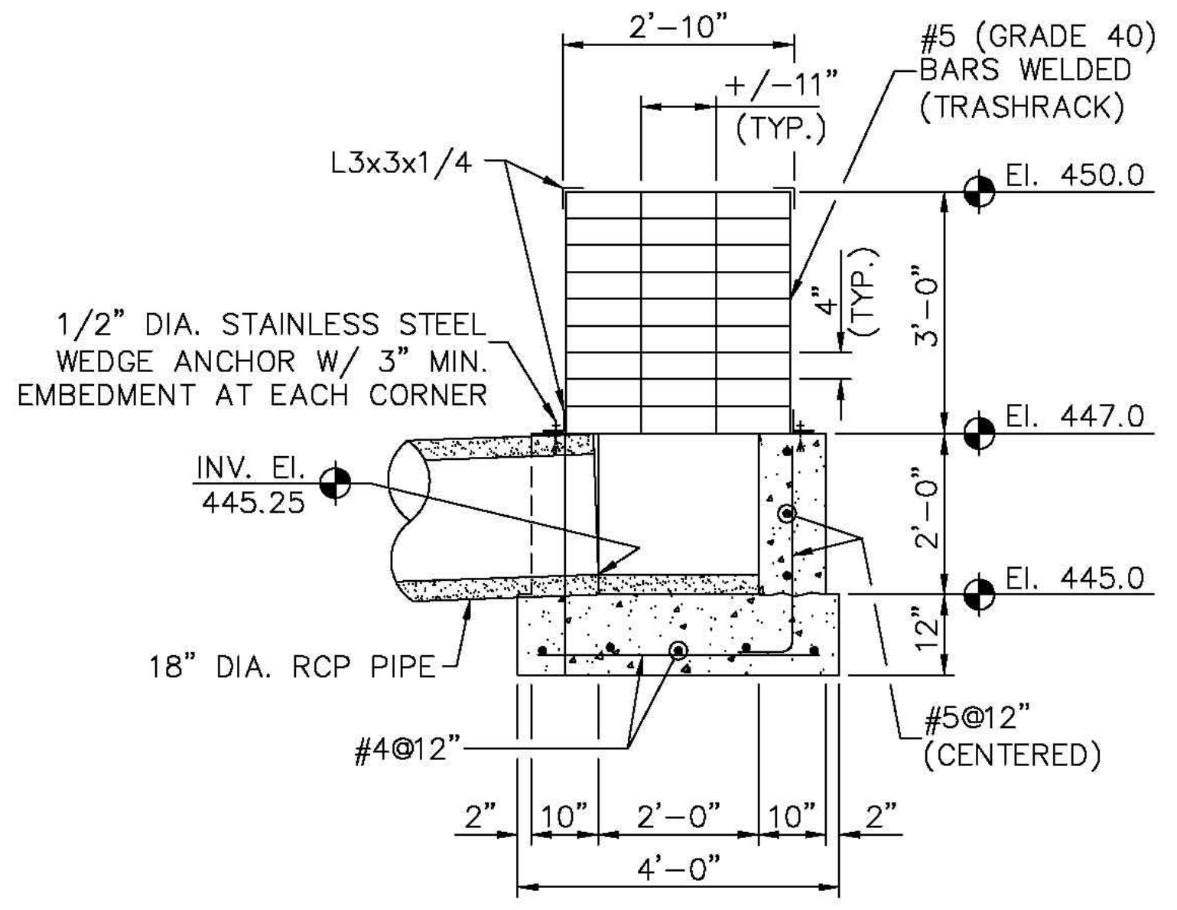

⑤ S11 SECTION
SCALE: 1"=2'-0"
2' 1' 0 2' 4'

HEI SHEET NO.
S11

PUMP STATION PLAN, SECTIONS & DETAIL
INTERIM ASH AND DRAINAGE COLLECTION PONDS
HUTSONVILLE, ILLINOIS

HUTSONVILLE POWER STATION
UNIT NO.

Ameren CIPS

Ameren CIPS DRAWING NUMBER S375 REV. 0

PAGE NO. 0

SCALE NONE
P.C.M.S. PROJECT
DRAFTER EJM
DATE 5/22/00

HANSON ENGINEERS INCORPORATED

DRAWING RECORD

REV.	DATE	APPROVED	DESCRIPTION	REV.	DATE	APPROVED	DESCRIPTION

t:\95x085\95x0862\S11.DWG 05/23/00 09:17 EJM

REV. NO.	DESCRIPTION	BY	DATE

NOTE:
IMAGE HAS BEEN REDUCED AND IS NO LONGER TO A SCALE

GZA GeoEnvironmental, Inc.

PROJ MGR: DPS
DESIGNED BY: DPS
REVIEWED BY: PJH
OPERATOR: CLK
DATE: 10-24-2011

HUTSONVILLE POWER STATION
15142 EAST 1900 AVENUE
HUTSONVILLE, ILLINOIS

POND B & POND C
PUMP STATION PLAN, SECTIONS & DETAIL

JOB NO.
01.0170142.30

FIGURE NO.
12

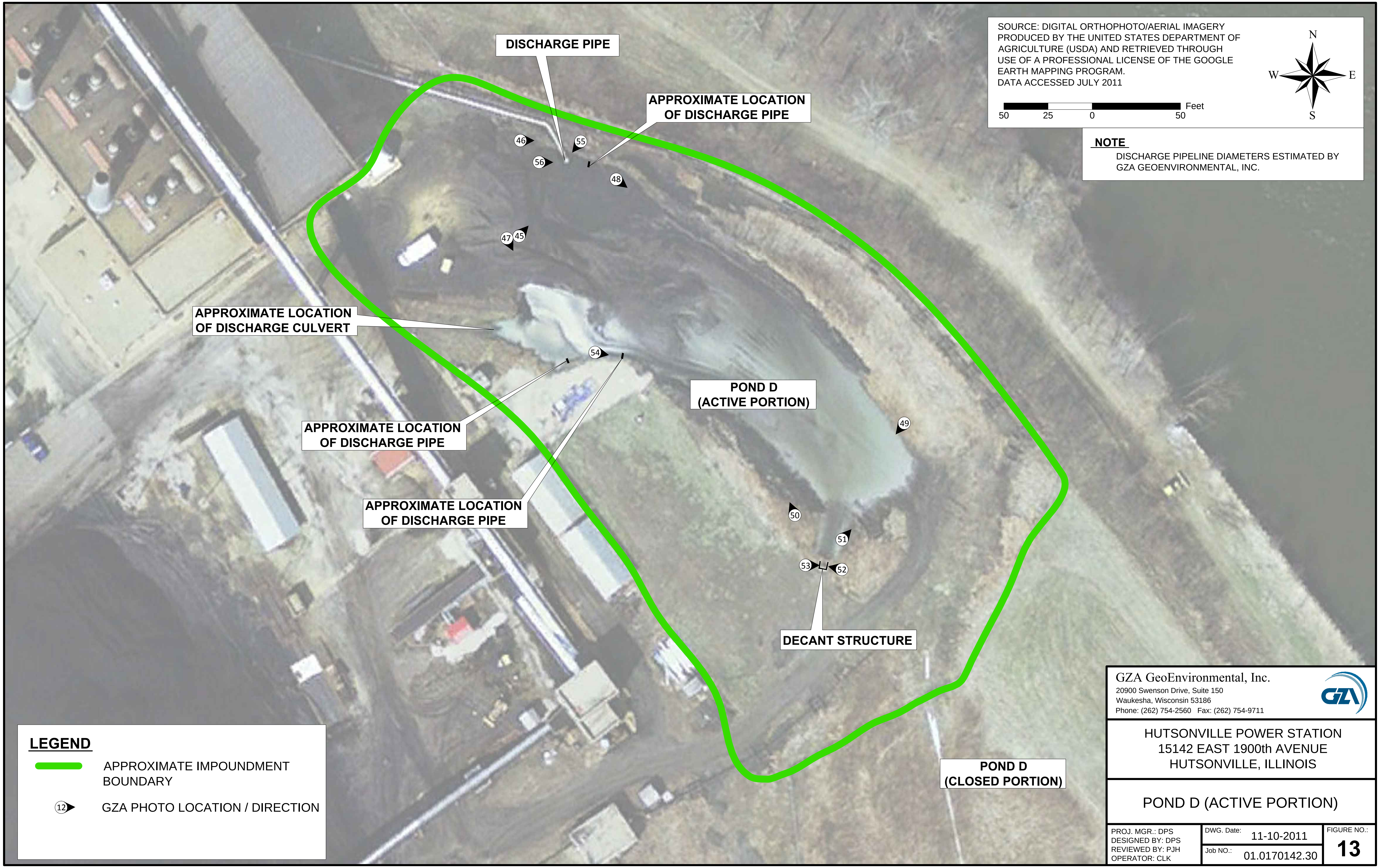

SOURCE: DIGITAL ORTHOPHOTO/AERIAL IMAGERY PRODUCED BY THE UNITED STATES DEPARTMENT OF AGRICULTURE (USDA) AND RETRIEVED THROUGH USE OF A PROFESSIONAL LICENSE OF THE GOOGLE EARTH MAPPING PROGRAM.
DATA ACCESSED JULY 2011

NOTE

DISCHARGE PIPELINE DIAMETERS ESTIMATED BY GZA GEOENVIRONMENTAL, INC.

LEGEND

🟩	APPROXIMATE IMPOUNDMENT BOUNDARY
(12)➤	GZA PHOTO LOCATION / DIRECTION

GZA GeoEnvironmental, Inc.
20900 Swenson Drive, Suite 150
Waukesha, Wisconsin 53186
Phone: (262) 754-2560 Fax: (262) 754-9711

HUTSONVILLE POWER STATION
15142 EAST 1900th AVENUE
HUTSONVILLE, ILLINOIS

POND D (ACTIVE PORTION)

PROJ. MGR.: DPS
DESIGNED BY: DPS
REVIEWED BY: PJH
OPERATOR: CLK

DWG. Date: 11-10-2011
Job NO.: 01.0170142.30
FIGURE NO.: 13

GZA-J:\GZA_USA#\01.0170142.30 Ash Imp. Round 10\01.0170142.30 Task 9 - Hutsonville\Drawings\Autocad\SITE PLANS.dwg [FIG 13] November 10, 2011 - 10:15am justin.hegarty

APPENDIX A

LIMITATIONS

DAM ENGINEERING & VISUAL INSPECTION LIMITATIONS

1. The observations described in this report were made under the conditions stated herein. The conclusions presented in the report were based solely on the services described therein, and not on scientific tasks or procedures beyond the scope of described services.

2. In preparing this report, GZA GeoEnvironmental, Inc. (GZA) has relied on certain information provided by Ameren Energy Generating Company, and Federal, state, and local officials and other parties referenced therein. GZA has also relied on other parties which were available to GZA at the time of the inspection. Although there may have been some degree of overlap in the information provided by these various sources, GZA did not attempt to independently verify the accuracy or completeness of all information reviewed or received during the course of this work.

3. In reviewing this Report, it should be realized that the reported condition of the dam is based on observations of field conditions during the course of this study along with data made available to GZA. The observations of conditions at the dam reflect only the situation present at the specific moment in time the observations were made, under the specific conditions present. It may be necessary to reevaluate the recommendations of this report when subsequent phases of evaluation or repair and improvement provide more data.

4. It is important to note that the condition of a dam depends on numerous and constantly changing internal and external conditions, and is evolutionary in nature. It would be incorrect to assume that the present condition of the dam will continue to represent the condition of the dam at some point in the future. Only through continued care and inspection can there be any chance that unsafe conditions may be detected.

5. Water level readings have been reviewed and interpretations have been made in the text of this report. Fluctuations in the level of the groundwater and surface water may occur due to variations in rainfall, temperature, and other factors different than at the time measurements were made.

6. GZA's comments on the hydrology, hydraulics, and embankment stability for the dam are based on a limited review of available design documentation provided by Ameren Energy Generating Company. Calculations and computer modeling used in these analyses were not available and were not independently reviewed by GZA.

7. This report has been prepared for the exclusive use of the US EPA for specific application to the existing dam facilities, in accordance with generally accepted dam engineering practices. No other warranty, express or implied, is made.

8. This dam inspection report has been prepared for this project by GZA. This report is for the owner's broad evaluation and management purposes only and is not sufficient, in and of itself, to prepare construction documents or an accurate bid.

APPENDIX B

DEFINITIONS

COMMON DAM SAFETY DEFINITIONS

For a comprehensive list of dam engineering terminology and definitions refer to references published by the U.S. Army Corps of Engineers, the Federal Energy Regulatory Commission, the Department of the Interior Bureau of Reclamation, or the Federal Emergency Management Agency.

Orientation

Upstream – Shall mean the side of the dam that borders the impoundment.

Downstream – Shall mean the high side of the dam, the side opposite the upstream side.

Right – Shall mean the area to the right when looking in the downstream direction.

Left – Shall mean the area to the left when looking in the downstream direction.

Dam Components

Dam – Shall mean any artificial barrier, including appurtenant works, which impounds or diverts water.

Embankment – Shall mean the fill material, usually earth or rock, placed with sloping sides, such that it forms a permanent barrier that impounds water.

Crest – Shall mean the top of the dam, usually provides a road or path across the dam.

Abutment – Shall mean that part of a valley side against which a dam is constructed. An artificial abutment is sometimes constructed as a concrete gravity section, to take the thrust of an arch dam where there is no suitable natural abutment.

Appurtenant Works – Shall mean structures, either in dams or separate there from, including but not be limited to, spillways; reservoirs and their rims; low level outlet works; and water conduits including tunnels, pipelines, or penstocks, either through the dams or their abutments.

Spillway – Shall mean a structure over or through which water flows are discharged. If the flow is controlled by gates or boards, it is a controlled spillway; if the fixed elevation of the spillway crest controls the level of the impoundment, it is an uncontrolled spillway.

General

EAP – Emergency Action Plan - Shall mean a predetermined plan of action to be taken to reduce the potential for property damage and/or loss of life in an area affected by an impending dam break.

O&M Manual – Operations and Maintenance Manual; Document identifying routine maintenance and operational procedures under normal and storm conditions.

Normal Pool – Shall mean the elevation of the impoundment during normal operating conditions.

Acre-foot – Shall mean a unit of volumetric measure that would cover one acre to a depth of one foot. It is equal to 43,560 cubic feet. One million U.S. gallons = 3.068 acre feet.

Height of Dam – Shall mean the vertical distance from the lowest portion of the natural ground, including any stream channel, along the downstream toe of the dam to the crest of the dam.

Spillway Design Flood (SDF) – Shall mean the flood used in the design of a dam and its appurtenant works particularly for sizing the spillway and outlet works, and for determining maximum temporary storage and height of dam requirements.

Condition Rating

SATISFACTORY - No existing or potential management unit safety deficiencies are recognized. Acceptable performance is expected under all applicable loading conditions (static, hydrologic, seismic) in accordance with the applicable criteria. Minor maintenance items may be required.

FAIR - Acceptable performance is expected under all required loading conditions (static, hydrologic, seismic) in accordance with the applicable safety regulatory criteria. Minor deficiencies may exist that require remedial action and/or secondary studies or investigations.

POOR - A management unit safety deficiency is recognized for any required loading condition (static, hydrologic, seismic) in accordance with the applicable dam safety regulatory criteria. Remedial action is necessary. POOR also applies when further critical studies or investigations are needed to identify any potential dam safety deficiencies.

UNSATISFACTORY - Considered unsafe. A dam safety deficiency is recognized that requires immediate or emergency remedial action for problem resolution. Reservoir restrictions may be necessary.

Hazard Potential

(In the event the impoundment should fail, the following would occur):

LESS THAN LOW HAZARD POTENTIAL: Failure or misoperation of the dam results in no probable loss of human life or economic or environmental losses.

LOW HAZARD POTENTIAL: Dams assigned the low hazard potential classification are those where failure or misoperation results in no probable loss of human life and low economic and/or environmental losses. Losses are principally limited to the owner’s property.

SIGNIFICANT HAZARD POTENTIAL: Dams assigned the significant hazard potential classification are those dams where failure or misoperation results in no probable loss of human life but can cause economic loss, environmental damage, disruption of lifeline facilities, or can impact other concerns. Significant hazard potential classification dams are often located in predominantly rural or agricultural areas but could be located in areas with population and significant infrastructure.

HIGH HAZARD POTENTIAL: Dams assigned the high hazard potential classification are those where failure or misoperation will probably cause loss of human life.

APPENDIX C

INSPECTION CHECKLISTS

Coal Combustion Dam Inspection Checklist Form

US Environmental
Protection Agency

Site Name: Hutsonville Power Station

Date: 6/2/11

Unit Name: Pond A

Operator's Name: Ameren Energy Generating Co.

Unit I.D.: 50056

Hazard Potential Classification: High Significant [✓ Low]

Inspector's Name: Patrick J. Harrison, P.E. and Doug P. Simon, P.E.

Check the appropriate box below. Provide comments when appropriate. If not applicable or not available, record "N/A". Any unusual conditions or construction practices that should be noted in the comments section. For large diked embankments, separate checklists may be used for different embankment areas. If separate forms are used, identify approximate area that the form applies to in comments.

	Yes	No
1. Frequency of Company's Dam Inspections?	Daily/Annual	
2. Pool elevation (operator records)?	469.5	
3. Decant inlet elevation (operator records)?	See Note Below	
4. Open channel spillway elevation (operator records)?	See Note Below	
5. Lowest dam crest elevation (operator records)?	470.0	
6. If instrumentation is present, are readings recorded (operator records)?	✓	
7. Is the embankment currently under construction?		✓
8. Foundation preparation (remove vegetation,stumps, topsoil in area where embankment fill will be placed)?	✓	
9. Trees growing on embankment? (If so, indicate largest diameter below)		✓
10. Cracks or scarps on crest?		✓
11. Is there significant settlement along the crest?		✓
12. Are decant trashracks clear and in place?	✓	
13. Depressions or sinkholes in tailings surface or whirlpool in the pool area?		✓
14. Clogged spillways, groin or diversion ditches?		✓
15. Are spillway or ditch linings deteriorated?		✓
16. Are outlets of decant or underdrains blocked?	See Note Below	
17. Cracks or scarps on slopes?		✓

	Yes	No
18. Sloughing or bulging on slopes?		✓
19. Major erosion or slope deterioration?		✓
20. Decant Pipes: See Note Below		
Is water entering inlet, but not exiting outlet?		
Is water exiting outlet, but not entering inlet?		
Is water exiting outlet flowing clear?		
21. Seepage (specify location, if seepage carries fines, and approximate seepage rate below):		
From underdrain?		✓
At isolated points on embankment slopes?		✓
At natural hillside in the embankment area?		✓
Over widespread areas?		✓
From downstream foundation area?		✓
"Boils" beneath stream or ponded water?		✓
Around the outside of the decant pipe?		✓
22. Surface movements in valley bottom or on hillside?		✓
23. Water against downstream toe?		✓
24. Were Photos taken during the dam inspection?	✓	

Major adverse changes in these items could cause instability and should be reported for further evaluation. Adverse conditions noted in these items should normally be described (extent, location, volume, etc.) in the space below and on the back of this sheet.

Inspection Issue # Comments

1. Inspections are done daily by plant operations staff but not typically recorded. Annual inspections are performed by Ameren engineers.

3. At the time of our inspection, the decant was not being used so that regular maintenance could be made to the outlet. Water was being pumped from Pond A to Pond B. Normal decant elevation is 467 feet.

4. No open channel spillway is present.

16, 20. The decant outlet was being serviced at the time of our visit and no water was flowing through it.

EPA FORM -XXXX

U. S. Environmental Protection Agency

Coal Combustion Waste (CCW)
Impoundment Inspection

Impoundment NPDES Permit # IL0004120

INSPECTOR Patrick J. Harrison, P.E.
Doug P. Simon, P.E.

Date June 2, 2011

Impoundment Name Pond A

Impoundment Company Ameren Energy Generating Company

EPA Region Region V

State Agency (Field Office) Addresss Illinois Environmental Protection Agency (NPDES Permit) and The Illinois Dept. of Natural Resources (Dam) both in Springfield, Illinois.

Name of Impoundment Pond A

(Report each impoundment on a separate form under the same Impoundment NPDES Permit number)

New X Update ______

	Yes	No
Is impoundment currently under construction?		X
Is water or ccw currently being pumped into the impoundment?	X	

IMPOUNDMENT FUNCTION: Storage of fly ash and clarification of water prior to discharge to Pond B.

Nearest Downstream Town : Name Hutsonville, Illinois

Distance from the impoundment Approximately 2.1 miles

Impoundment Location:

Longitude	87	Degrees	39	Minutes	44	Seconds
Latitude	39	Degrees	07	Minutes	46	Seconds

State Illinois County Crawford

Does a state agency regulate this impoundment? YES X NO ______

If So Which State Agency? The Illinois Department of Natural Resources regulates the dam. The Illinois Environmental Protection Agency regulates the discharge of Of water (NPDES Permit).

HAZARD POTENTIAL (In the event the impoundment should fail, the following would occur):

______ **LESS THAN LOW HAZARD POTENTIAL:** Failure or misoperation of the dam results in no probable loss of human life or economic or environmental losses.

__X__ **LOW HAZARD POTENTIAL:** Dams assigned the low hazard potential classification are those where failure or misoperation results in no probable loss of human life and low economic and/or environmental losses. Losses are principally limited to the owner's property.

______ **SIGNIFICANT HAZARD POTENTIAL:** Dams assigned the significant hazard potential classification are those dams where failure or misoperation results in no probable loss of human life but can cause economic loss, environmental damage, disruption of lifeline facilities, or can impact other concerns. Significant hazard potential classification dams are often located in predominantly rural or agricultural areas but could be located in areas with population and significant infrastructure.

______ **HIGH HAZARD POTENTIAL:** Dams assigned the high hazard potential classification are those where failure or misoperation will probably cause loss of human life.

DESCRIBE REASONING FOR HAZARD RATING CHOSEN:

Potential failure of the impoundment is unlikely to result in loss of life and economic and environmental damages would likely be limited to owners property.

CONFIGURATION:

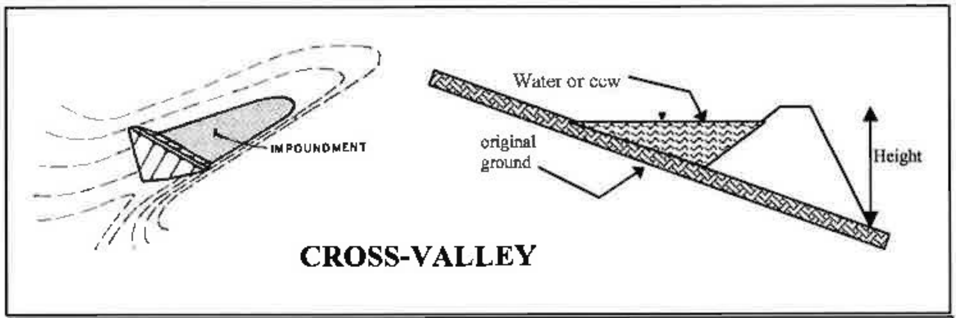

CROSS-VALLEY

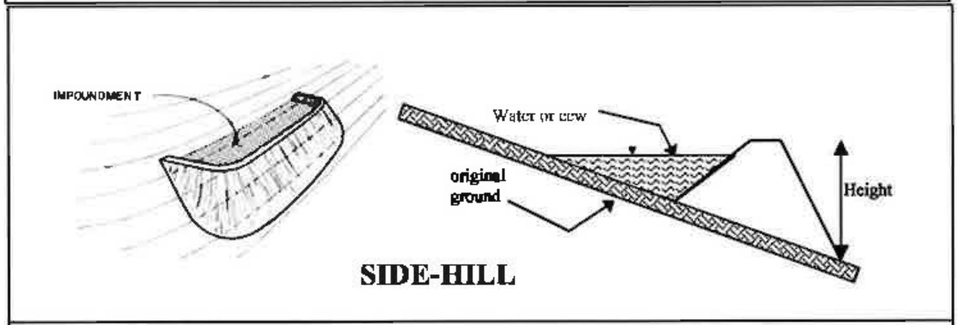

SIDE-HILL

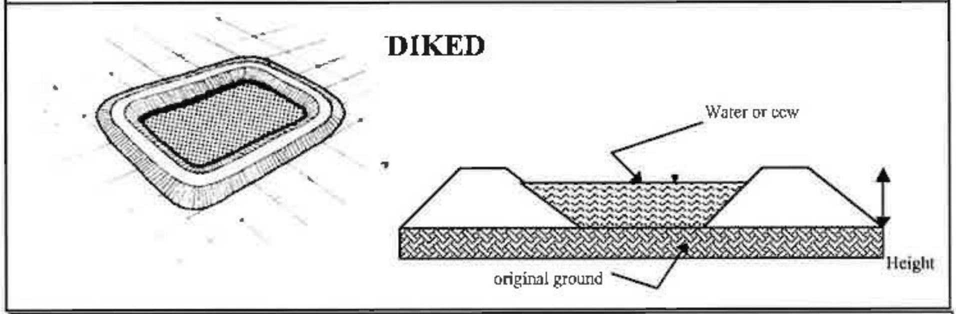

DIKED

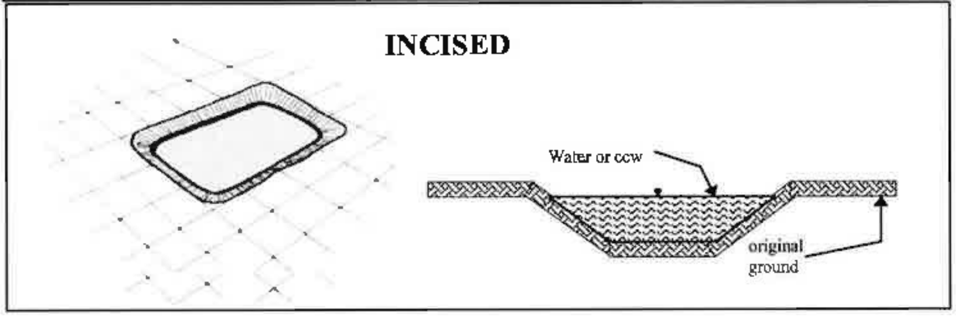

INCISED

_____ Cross-Valley
_____ Side-Hill
__X__ Diked
_____ Incised (form completion optional)
_____ Combination Incised/Diked

Embankment Height 22 feet
Embankment Material Compacted fill
Pool Area 14 acres
Liner geomembrane
Current Freeboard 0.5 feet
Liner Permeability Not available

TYPE OF OUTLET (Mark all that apply)

____ **Open Channel Spillway**
_____ Trapezoidal
_____ Triangular
_____ Rectangular
_____ Irregular

_____ depth
_____ bottom (or average) width
_____ top width
_____

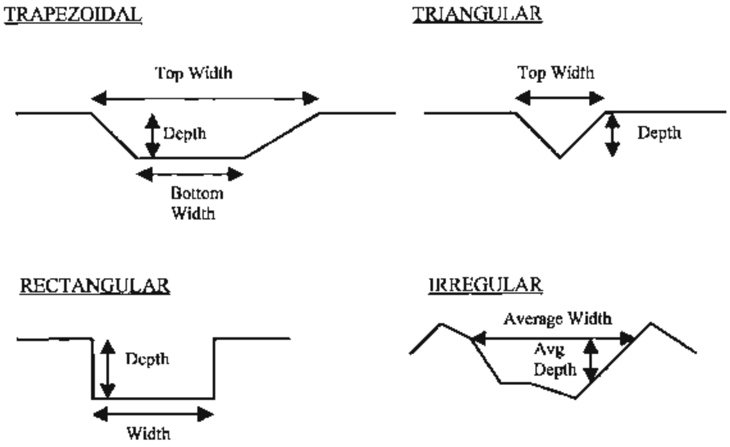

X **Outlet**

18 inside diameter

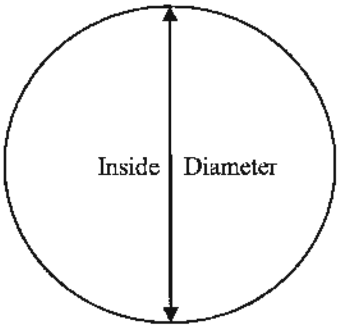

Material
_____ corrugated metal
X welded steel
_____ concrete
_____ plastic (hdpe, pvc, etc.)
_____ other (specify) ____________________

_____

Is water flowing through the outlet? YES ______ NO X

_____ **No Outlet**

Outlet was being repaired at the time of inspection. Decant was bypassed using pumps.

_____

_____ **Other Type of Outlet** (specify) ____________________________

The Impoundment was Designed By Hanson Engineers
Springfield, Illinois

Has there ever been a failure at this site? YES __________ NO ___X______

If So When? ______________________________

If So Please Describe : ____

Has there ever been significant seepages at this site? YES _______ NO X

If So When? ____________________

IF So Please Describe: ____________________

Has there ever been any measures undertaken to monitor/lower Phreatic water table levels based on past seepages or breaches at this site? YES ______ NO X

If so, which method (e.g., piezometers, gw pumping,...)? ____________

If so Please Describe : ____________

Coal Combustion Dam Inspection Checklist Form

US Environmental
Protection Agency

Site Name: Hutsonville Power Station
Date: 6/2/11
Unit Name: Pond B
Operator's Name: Ameren Energy Generating Co.
Unit I.D.:
Hazard Potential Classification: High Significant [✓ Low]
Inspector's Name: Patrick J. Harrison, P.E. and Doug P. Simon, P.E.

Check the appropriate box below. Provide comments when appropriate. If not applicable or not available, record "N/A". Any unusual conditions or construction practices that should be noted in the comments section. For large diked embankments, separate checklists may be used for different embankment areas. If separate forms are used, identify approximate area that the form applies to in comments.

	Yes	No		Yes	No
1. Frequency of Company's Dam Inspections?	Daily/Annual		18. Sloughing or bulging on slopes?		✓
2. Pool elevation (operator records)?	461.8		19. Major erosion or slope deterioration?		✓
3. Decant inlet elevation (operator records)?	461.8		20. Decant Pipes:		
4. Open channel spillway elevation (operator records)?	See Note Below		Is water entering inlet, but not exiting outlet?		✓
5. Lowest dam crest elevation (operator records)?	465.0		Is water exiting outlet, but not entering inlet?		✓
6. If instrumentation is present, are readings recorded (operator records)?	✓		Is water exiting outlet flowing clear?	✓	
7. Is the embankment currently under construction?		✓	21. Seepage (specify location, if seepage carries fines, and approximate seepage rate below):		
8. Foundation preparation (remove vegetation,stumps, topsoil in area where embankment fill will be placed)?	✓		From underdrain?		✓
9. Trees growing on embankment? (If so, indicate largest diameter below)		✓	At isolated points on embankment slopes?		✓
10. Cracks or scarps on crest?		✓	At natural hillside in the embankment area?		✓
11. Is there significant settlement along the crest?		✓	Over widespread areas?		✓
12. Are decant trashracks clear and in place?	✓		From downstream foundation area?		✓
13. Depressions or sinkholes in tailings surface or whirlpool in the pool area?		✓	"Boils" beneath stream or ponded water?		✓
14. Clogged spillways, groin or diversion ditches?		✓	Around the outside of the decant pipe?		✓
15. Are spillway or ditch linings deteriorated?		✓	22. Surface movements in valley bottom or on hillside?		✓
16. Are outlets of decant or underdrains blocked?		✓	23. Water against downstream toe?		✓
17. Cracks or scarps on slopes?		✓	24. Were Photos taken during the dam inspection?	✓	

Major adverse changes in these items could cause instability and should be reported for further evaluation. Adverse conditions noted in these items should normally be described (extent, location, volume, etc.) in the space below and on the back of this sheet.

Inspection Issue # Comments

1. Inspections are done daily by plant operations staff but not typically recorded. Annual inspections are performed by Ameren engineers.

4. No open channel spillway is present.

U. S. Environmental Protection Agency

Coal Combustion Waste (CCW)
Impoundment Inspection

Impoundment NPDES Permit # IL0004120

INSPECTOR Patrick J. Harrison, P.E.
Doug P. Simon, P.E.

Date June 2, 2011

Impoundment Name Pond B
Impoundment Company Ameren Energy Generating Company
EPA Region Region V
State Agency (Field Office) Addresss Illinois Environmental Protection Agency
Springfield, Illinois
Name of Impoundment Pond B
(Report each impoundment on a separate form under the same Impoundment NPDES Permit number)

New X Update

	Yes	No
Is impoundment currently under construction?		X
Is water or ccw currently being pumped into the impoundment?	X	

IMPOUNDMENT FUNCTION: Storage of fly ash and bottom ash; clarification of water prior to discharge.

Nearest Downstream Town : Name Hutsonville, Illinois
Distance from the impoundment Approximately 2.1 miles
Impoundment
Location: Longitude 87 Degrees 39 Minutes 34 Seconds
Latitude 39 Degrees 07 Minutes 46 Seconds
State Illinois County Crawford

Does a state agency regulate this impoundment? YES X NO

If So Which State Agency? The Illinois Environmental Protection Agency regulates the discharge of water (NPDES Permit).

HAZARD POTENTIAL (In the event the impoundment should fail, the following would occur):

______ **LESS THAN LOW HAZARD POTENTIAL:** Failure or misoperation of the dam results in no probable loss of human life or economic or environmental losses.

X **LOW HAZARD POTENTIAL:** Dams assigned the low hazard potential classification are those where failure or misoperation results in no probable loss of human life and low economic and/or environmental losses. Losses are principally limited to the owner's property.

______ **SIGNIFICANT HAZARD POTENTIAL:** Dams assigned the significant hazard potential classification are those dams where failure or misoperation results in no probable loss of human life but can cause economic loss, environmental damage, disruption of lifeline facilities, or can impact other concerns. Significant hazard potential classification dams are often located in predominantly rural or agricultural areas but could be located in areas with population and significant infrastructure.

______ **HIGH HAZARD POTENTIAL:** Dams assigned the high hazard potential classification are those where failure or misoperation will probably cause loss of human life.

DESCRIBE REASONING FOR HAZARD RATING CHOSEN:

Potential failure of the impoundment is unlikely to result in loss of life and economic and environmental damages would likely be limited to owners property.

CONFIGURATION:

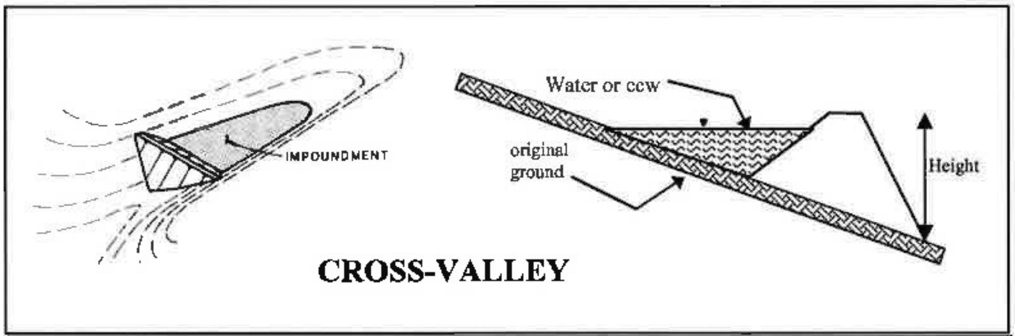

CROSS-VALLEY

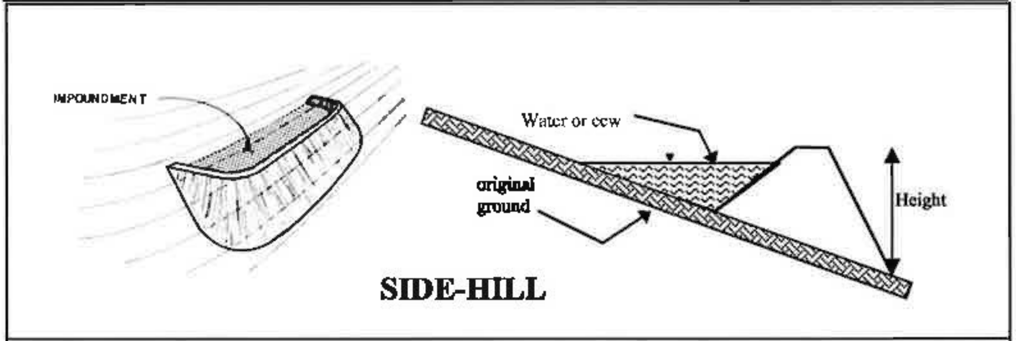

SIDE-HILL

DIKED

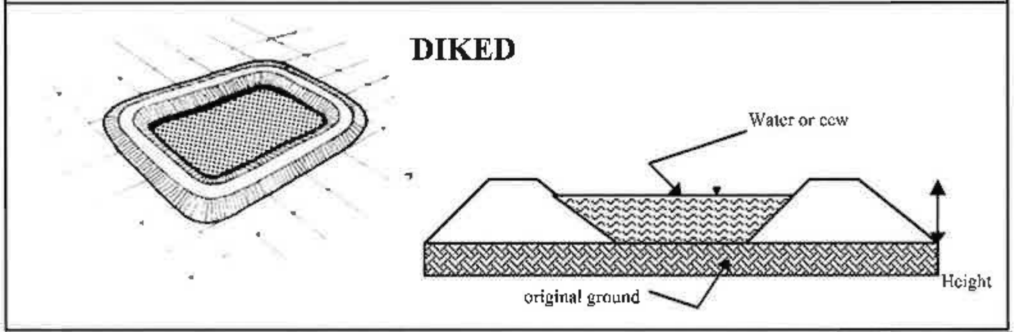

INCISED

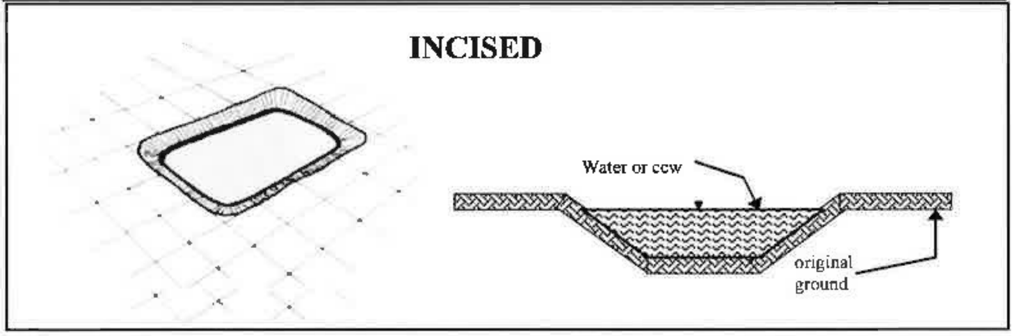

_____ Cross-Valley
_____ Side-Hill
_X_ Diked
_____ Incised (form completion optional)
_____ Combination Incised/Diked

Embankment Height 17 feet Embankment Material Compacted fill
Pool Area 4.4 acres Liner geomembrane
Current Freeboard 3.2 feet Liner Permeability Not available

TYPE OF OUTLET (Mark all that apply)

______ **Open Channel Spillway**
______ Trapezoidal
______ Triangular
______ Rectangular
______ Irregular

______ depth
______ bottom (or average) width
______ top width
______

TRAPEZOIDAL

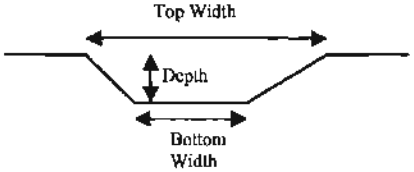

TRIANGULAR

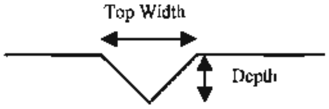

RECTANGULAR

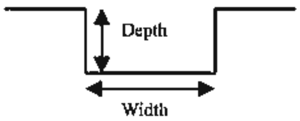

IRREGULAR

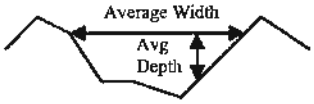

X **Outlet**

18 inside diameter

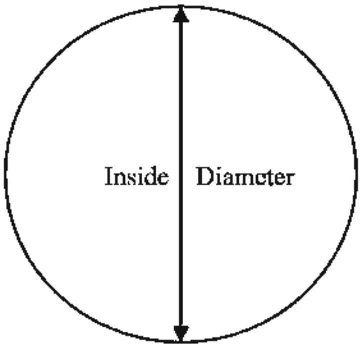

Material
______ corrugated metal
______ welded steel
______ concrete
X plastic (hdpe, pvc, etc.)
______ other (specify) ______________

Is water flowing through the outlet? YES X NO ______

______ **No Outlet**

______ **Other Type of Outlet** (specify) ______________

The Impoundment was Designed By Hanson Engineers
Springfield, Illinois

Has there ever been a failure at this site? YES __________ NO X

If So When? ____________________________

If So Please Describe : ____________________________

Has there ever been significant seepages at this site? YES ______ NO X

If So When? ______

IF So Please Describe: ______

Has there ever been any measures undertaken to monitor/lower Phreatic water table levels based on past seepages or breaches at this site? YES ________ NO X

If so, which method (e.g., piezometers, gw pumping,...)? ____________________

If so Please Describe : ____________________

Coal Combustion Dam Inspection Checklist Form

US Environmental
Protection Agency

Site Name: Hutsonville Power Station

Date: 6/2/11

Unit Name: Pond C

Operator's Name: Ameren Energy Generating Co.

Unit I.D.:

Hazard Potential Classification: High Significant [✓ Low]

Inspector's Name: Patrick J. Harrison, P.E. and Doug P. Simon, P.E.

Check the appropriate box below. Provide comments when appropriate. If not applicable or not available, record "N/A". Any unusual conditions or construction practices that should be noted in the comments section. For large diked embankments, separate checklists may be used for different embankment areas. If separate forms are used, identify approximate area that the form applies to in comments.

	Yes	No		Yes	No
1. Frequency of Company's Dam Inspections?	Daily/Annual		18. Sloughing or bulging on slopes?		✓
2. Pool elevation (operator records)?	449.6		19. Major erosion or slope deterioration?		✓
3. Decant inlet elevation (operator records)?	449.6		20. Decant Pipes:		
4. Open channel spillway elevation (operator records)?	See Note Below		Is water entering inlet, but not exiting outlet?		✓
5. Lowest dam crest elevation (operator records)?	455.0		Is water exiting outlet, but not entering inlet?		✓
6. If instrumentation is present, are readings recorded (operator records)?	✓		Is water exiting outlet flowing clear?	✓	
7. Is the embankment currently under construction?		✓	21. Seepage (specify location, if seepage carries fines, and approximate seepage rate below):		
8. Foundation preparation (remove vegetation,stumps, topsoil in area where embankment fill will be placed)?	✓		From underdrain?		✓
9. Trees growing on embankment? (If so, indicate largest diameter below)		✓	At isolated points on embankment slopes?		✓
10. Cracks or scarps on crest?		✓	At natural hillside in the embankment area?		✓
11. Is there significant settlement along the crest?		✓	Over widespread areas?		✓
12. Are decant trashracks clear and in place?	✓		From downstream foundation area?		✓
13. Depressions or sinkholes in tailings surface or whirlpool in the pool area?		✓	"Boils" beneath stream or ponded water?		✓
14. Clogged spillways, groin or diversion ditches?		✓	Around the outside of the decant pipe?		✓
15. Are spillway or ditch linings deteriorated?		✓	22. Surface movements in valley bottom or on hillside?		✓
16. Are outlets of decant or underdrains blocked?		✓	23. Water against downstream toe?		✓
17. Cracks or scarps on slopes?		✓	24. Were Photos taken during the dam inspection?	✓	

Major adverse changes in these items could cause instability and should be reported for further evaluation. Adverse conditions noted in these items should normally be described (extent, location, volume, etc.) in the space below and on the back of this sheet.

Inspection Issue # Comments

1. Inspections are done daily by plant operations staff but not typically recorded. Annual inspections are performed by Ameren engineers.

4. There is no open channel spillway or associated structures.

3, 12, 20. Water is pumped from Pond C to Pond B.

EPA FORM -XXXX

U. S. Environmental Protection Agency

Coal Combustion Waste (CCW)
Impoundment Inspection

Impoundment NPDES Permit # IL0004120

INSPECTOR Patrick J. Harrison, P.E.
Doug P. Simon, P.E.

Date June 2, 2011

Impoundment Name Pond C
Impoundment Company Ameren Energy Generating Company
EPA Region Region V
State Agency (Field Office) Addresss Illinois Environmental Protection Agency
Springfield, Illinois
Name of Impoundment Pond C
(Report each impoundment on a separate form under the same Impoundment NPDES Permit number)

New X Update ______

	Yes	No
Is impoundment currently under construction?		X
Is water or ccw currently being pumped into the impoundment?	X	

IMPOUNDMENT FUNCTION: Storage of bottom ash; clarification of water prior to discharge to Pond B.

Nearest Downstream Town : Name Hutsonville, Illinois
Distance from the impoundment Approximately 2.1 miles
Impoundment
Location: Longitude 87 Degrees 39 Minutes 30 Seconds
Latitude 39 Degrees 07 Minutes 52 Seconds
State Illinois County Crawford

Does a state agency regulate this impoundment? YES X NO ______

If So Which State Agency? The Illinois Environmental Protection Agency regulates the discharge of Water (NPDES Permit).

HAZARD POTENTIAL (In the event the impoundment should fail, the following would occur):

______ **LESS THAN LOW HAZARD POTENTIAL:** Failure or misoperation of the dam results in no probable loss of human life or economic or environmental losses.

__X__ **LOW HAZARD POTENTIAL:** Dams assigned the low hazard potential classification are those where failure or misoperation results in no probable loss of human life and low economic and/or environmental losses. Losses are principally limited to the owner's property.

______ **SIGNIFICANT HAZARD POTENTIAL:** Dams assigned the significant hazard potential classification are those dams where failure or misoperation results in no probable loss of human life but can cause economic loss, environmental damage, disruption of lifeline facilities, or can impact other concerns. Significant hazard potential classification dams are often located in predominantly rural or agricultural areas but could be located in areas with population and significant infrastructure.

______ **HIGH HAZARD POTENTIAL:** Dams assigned the high hazard potential classification are those where failure or misoperation will probably cause loss of human life.

DESCRIBE REASONING FOR HAZARD RATING CHOSEN:

Potential failure of the impoundment is unlikely to result in loss of life and economic and environmental damages would likely be limited to owners property.

CONFIGURATION:

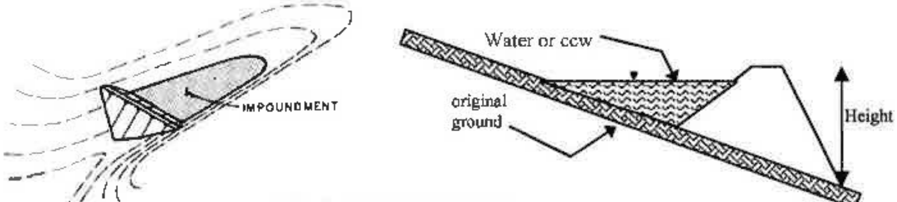

CROSS-VALLEY

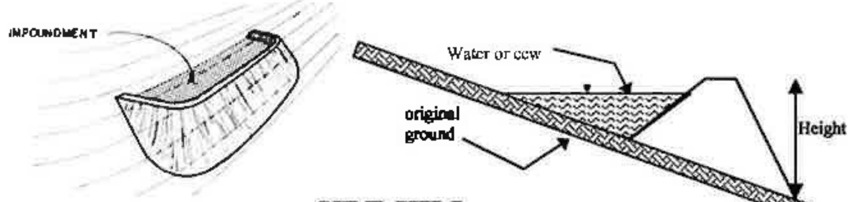

SIDE-HILL

DIKED

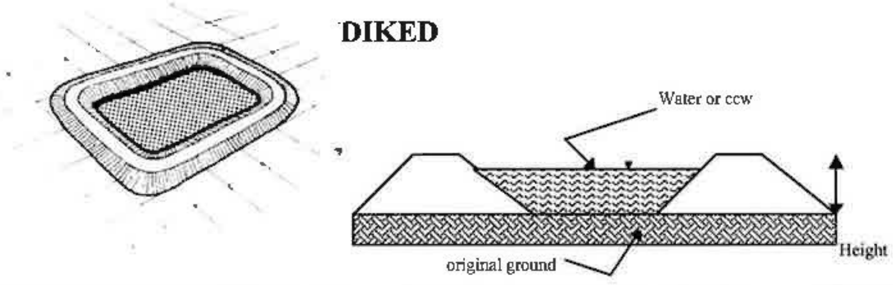

INCISED

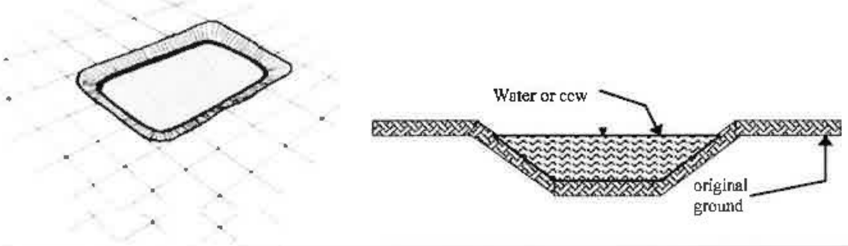

_____ Cross-Valley
_____ Side-Hill
__X__ Diked
_____ Incised (form completion optional)
_____ Combination Incised/Diked

Embankment Height 12 feet
Pool Area 2 acres
Current Freeboard 5.4 feet
Embankment Material Compacted fill
Liner geomembrane
Liner Permeability Not available

TYPE OF OUTLET (Mark all that apply)

_____ **Open Channel Spillway**
_____ Trapezoidal
_____ Triangular
_____ Rectangular
_____ Irregular

_____ depth
_____ bottom (or average) width
_____ top width
_____

TRAPEZOIDAL

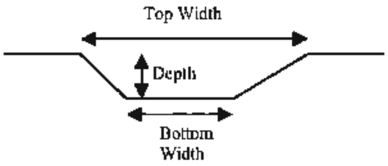

TRIANGULAR

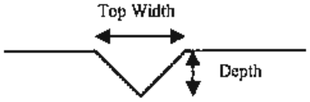

RECTANGULAR

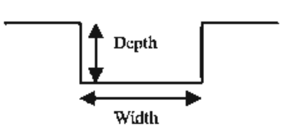

IRREGULAR

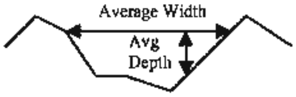

X **Outlet**

12 inside diameter

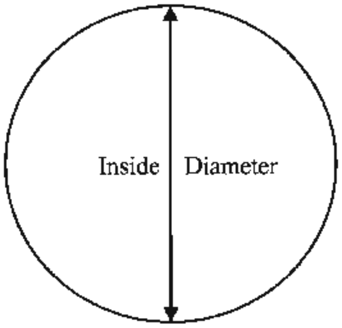

Material
_____ corrugated metal
X welded steel
_____ concrete
_____ plastic (hdpe, pvc, etc.)
_____ other (specify) ____________________

_____

Is water flowing through the outlet? YES X NO _______

_____ **No Outlet**

_____

_____ **Other Type of Outlet** (specify) ________________________________

The Impoundment was Designed By Hanson Engineers
Springfield, Illinois

Has there ever been a failure at this site? YES __________ NO ___X_______

If So When? ____________________________

If So Please Describe : ____

Has there ever been significant seepages at this site? YES _______ NO X

If So When? ______________________

IF So Please Describe: ______________________

Has there ever been any measures undertaken to monitor/lower Phreatic water table levels based on past seepages or breaches at this site? YES ________ NO X

If so, which method (e.g., piezometers, gw pumping,...)? ____________________

If so Please Describe : ____________________

Coal Combustion Dam Inspection Checklist Form

US Environmental
Protection Agency

Site Name: Hutsonville Power Station

Date: 6/2/11

Unit Name: Pond D

Operator's Name: Ameren Energy Generating Co.

Unit I.D.:

Hazard Potential Classification: High Significant [✓ Low]

Inspector's Name: Patrick J. Harrison, P.E. and Doug P. Simon, P.E.

Check the appropriate box below. Provide comments when appropriate. If not applicable or not available, record "N/A". Any unusual conditions or construction practices that should be noted in the comments section. For large diked embankments, separate checklists may be used for different embankment areas. If separate forms are used, identify approximate area that the form applies to in comments.

	Yes	No		Yes	No
1. Frequency of Company's Dam Inspections?	Wkly/Annual		18. Sloughing or bulging on slopes?		✓
2. Pool elevation (operator records)?	449.8		19. Major erosion or slope deterioration?		✓
3. Decant inlet elevation (operator records)?	449.8		20. Decant Pipes:	■	■
4. Open channel spillway elevation (operator records)?	See Note Below		Is water entering inlet, but not exiting outlet?		✓
5. Lowest dam crest elevation (operator records)?	453.8		Is water exiting outlet, but not entering inlet?		✓
6. If instrumentation is present, are readings recorded (operator records)?	✓		Is water exiting outlet flowing clear?	✓	
7. Is the embankment currently under construction?		✓	21. Seepage (specify location, if seepage carries fines, and approximate seepage rate below):	■	■
8. Foundation preparation (remove vegetation,stumps, topsoil in area where embankment fill will be placed)?	✓		From underdrain?		✓
9. Trees growing on embankment? (If so, indicate largest diameter below)		✓	At isolated points on embankment slopes?		✓
10. Cracks or scarps on crest?		✓	At natural hillside in the embankment area?		✓
11. Is there significant settlement along the crest?		✓	Over widespread areas?		✓
12. Are decant trashracks clear and in place?	✓		From downstream foundation area?		✓
13. Depressions or sinkholes in tailings surface or whirlpool in the pool area?		✓	"Boils" beneath stream or ponded water?		✓
14. Clogged spillways, groin or diversion ditches?		✓	Around the outside of the decant pipe?		✓
15. Are spillway or ditch linings deteriorated?		✓	22. Surface movements in valley bottom or on hillside?		✓
16. Are outlets of decant or underdrains blocked?		✓	23. Water against downstreem toe?	✓	
17. Cracks or scarps on slopes?		✓	24. Were Photos taken during the dam inspection?	✓	

Major adverse changes in these items could cause instability and should be reported for further evaluation. Adverse conditions noted in these items should normally be described (extent, location, volume, etc.) in the space below and on the back of this sheet.

Inspection Issue # Comments

1. Inspections are done weekly by plant operations staff. Annual inspections are performed by Ameren engineers.

4. There is no open channel spillway or associated structures.

23. The Wabash River is adjacent to the downstream toe during high water events.

EPA FORM -XXXX

U. S. Environmental Protection Agency

Coal Combustion Waste (CCW) Impoundment Inspection

Impoundment NPDES Permit # IL0004120

INSPECTOR Patrick J. Harrison, P.E.
Doug P. Simon, P.E.

Date June 2, 2011

Impoundment Name Pond D
Impoundment Company Ameren Energy Generating Company
EPA Region Region V
State Agency (Field Office) Addresss Illinois Environmental Protection Agency
Springfield, Illinois
Name of Impoundment Pond D
(Report each impoundment on a separate form under the same Impoundment NPDES Permit number)

New X Update ______

	Yes	No
Is impoundment currently under construction?		X
Is water or ccw currently being pumped into the impoundment?	X	

IMPOUNDMENT FUNCTION: Storage of bottom ash; clarification of water prior to discharge to Pond C.

Nearest Downstream Town : Name Hutsonville, Illinois
Distance from the impoundment Approximately 2.1 miles
Impoundment
Location: Longitude 87 Degrees 39 Minutes 23 Seconds
Latitude 39 Degrees 07 Minutes 50 Seconds
State Illinois County Crawford

Does a state agency regulate this impoundment? YES X NO ______

If So Which State Agency? The Illinois Environmental Protection Agency regulates the discharge of water (NPDES Permit).

HAZARD POTENTIAL (In the event the impoundment should fail, the following would occur):

______ **LESS THAN LOW HAZARD POTENTIAL:** Failure or misoperation of the dam results in no probable loss of human life or economic or environmental losses.

_X____ **LOW HAZARD POTENTIAL:** Dams assigned the low hazard potential classification are those where failure or misoperation results in no probable loss of human life and low economic and/or environmental losses. Losses are principally limited to the owner's property.

______ **SIGNIFICANT HAZARD POTENTIAL:** Dams assigned the significant hazard potential classification are those dams where failure or misoperation results in no probable loss of human life but can cause economic loss, environmental damage, disruption of lifeline facilities, or can impact other concerns. Significant hazard potential classification dams are often located in predominantly rural or agricultural areas but could be located in areas with population and significant infrastructure.

______ **HIGH HAZARD POTENTIAL:** Dams assigned the high hazard potential classification are those where failure or misoperation will probably cause loss of human life.

DESCRIBE REASONING FOR HAZARD RATING CHOSEN:

Potential failure of the impoundment is unlikely to result in loss of life and during normal flood stages on the Wabash River, economic and environmental damages would likely be limited to owners property

CONFIGURATION:

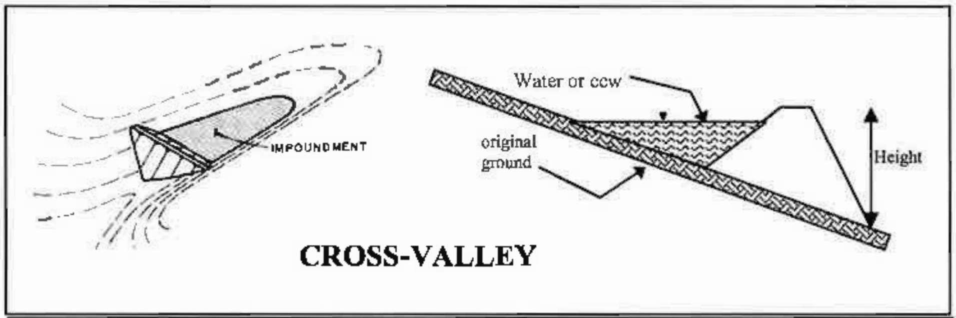

CROSS-VALLEY

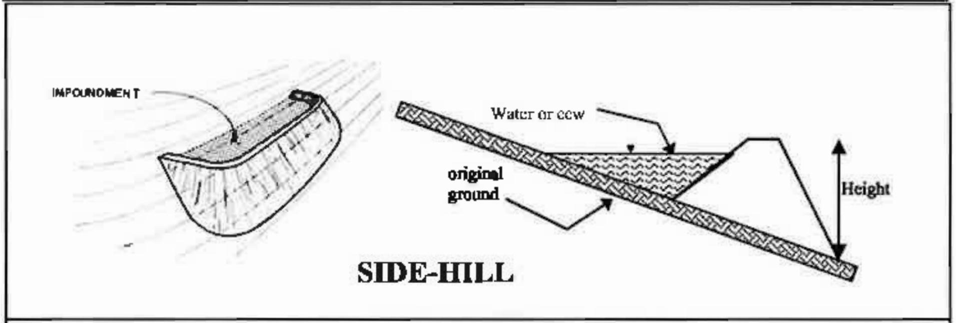

SIDE-HILL

DIKED

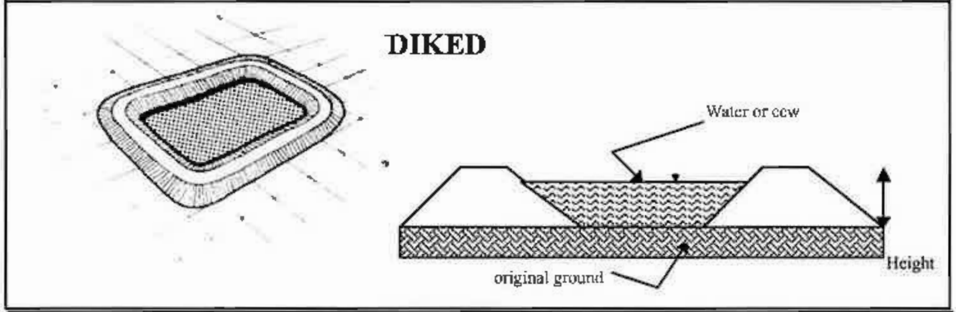

INCISED

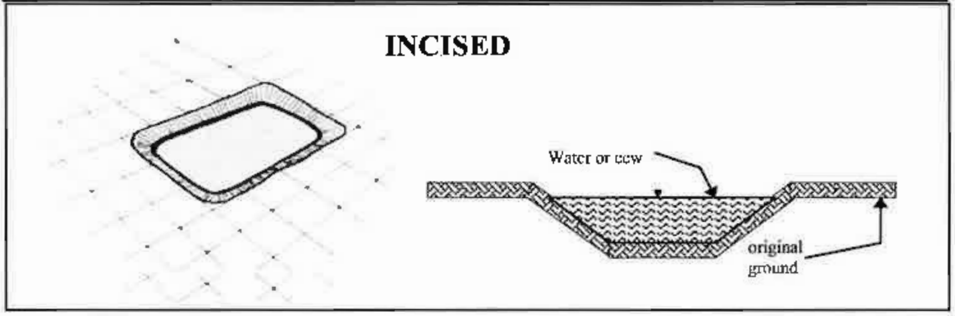

_____ Cross-Valley
_____ Side-Hill
__X__ Diked
_____ Incised (form completion optional)
_____ Combination Incised/Diked

Embankment Height 15 feet
Pool Area 1.2 acres
Current Freeboard 4 feet

Embankment Material Compacted Clay
Liner No Liner Present
Liner Permeability NA

TYPE OF OUTLET (Mark all that apply)

_____ **Open Channel Spillway**
_____ Trapezoidal
_____ Triangular
_____ Rectangular
_____ Irregular

_____ depth
_____ bottom (or average) width
_____ top width

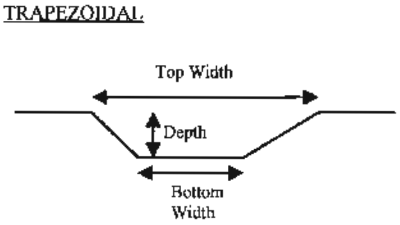

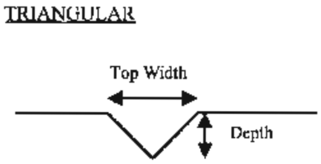

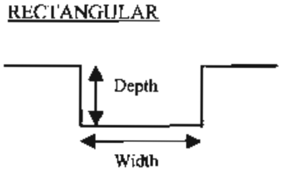

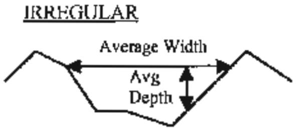

X **Outlet**

24 inside diameter

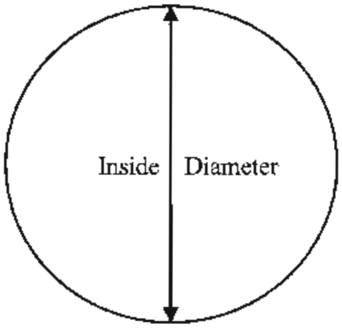

Material
_____ corrugated metal
X welded steel
_____ concrete
_____ plastic (hdpe, pvc, etc.)
_____ other (specify) _____________________

Is water flowing through the outlet? YES X NO _____

_____ **No Outlet**

_____ **Other Type of Outlet** (specify) _____________________

The Impoundment was Designed By Information not available

Has there ever been a failure at this site? YES __________ NO __X______

If So When? ____________________

If So Please Describe : ____________________

Has there ever been significant seepages at this site? YES ______ NO X

If So When? ____________

IF So Please Describe: ____________

Has there ever been any measures undertaken to monitor/lower Phreatic water table levels based on past seepages or breaches at this site? YES ________ NO X

If so, which method (e.g., piezometers, gw pumping,...)? ____________________

If so Please Describe : ________________________________

APPENDIX D

REFRENCES

REFERENCE LIST
HUTSONVILLE POWER STATION

Hanson Engineers. "Fly Ash Disposal Pond Site View; Hutsonville Power Station; Central Illinois Public Service Co." Drawing No. S-321. Dated April 1984.

Hanson Engineers. "Fly Ash Disposal Pond; Site View, Hutsosville Power Station; Central Illinois Public Service Co." Drawing No. S-321-A. Undated.

Hanson Engineers. "Fly Ash Disposal Pond, Details and Sections; Hutsonville Power Station; Central Illinois Public Service Co." Drawing No. S-322. Dated April 1984.

Hanson Engineers. "Fly Ash Disposal Pond; Details and Sections; Hutsonville Power Station, Central Illinois Public Service Co." Drawing No. S-323. Dated April 1984.

Hanson Engineers. "Fly Ash Disposal Pond; Details and Sections; Hutsonville Power Station, Central Illinois Public Service Co." Drawing No. S-324. Dated April 1984.

Hanson Engineers. "Fly Ash Disposal Pond; Details and Sections; Hutsonville Power Station, Central Illinois Public Service Co." Drawing No. S-325. Dated April 1984.

Hanson Engineers. "Fly Ash Disposal Pond; Monitoring Well Locations; Hutsonville Power Station; Central Illinois Public Service Co." Drawing No. S-326. Dated April 1984.

Hanson Engineers. "Fly Ash Disposal Pond; 10" Ash Line Profile; Hutsonville Power Station; Central Illinois Public Service Co." Drawing No. S-327. Dated June 1985.

Hanson Engineers. "Fly Ash Disposal Pond; Pipe Support Details; Hutsonville Power Station, Central Illinois Public Service Co." Drawing No. S-328. Dated April 1984.

Hanson Engineers. "Fly Ash Disposal Pond; Pipe Rack Details; Hutsonville Power Station; Central Illinois Public Service Co." Drawing No. S-329. Dated June 1985.

Hanson Engineers. "Fly Ash Pond Boring Logs; Hutsonville Power Station." Drawing No. S-330. Dated October 1984.

Geotechnology Inc. *Global Stability Evaluation, Hutsonville Power Station, Ash Pond D, Hutsonville, Illinois*. Geotechnology Project No. J017150.01. Dated January 4, 2011.

Richardson, Donald L., P.E. Letter to Mr. Martin J. Stralow, P.E. regarding the Central Illinois Public Service Co. Hutsonville Generating Station Proposed Fly Ash Pond. Dated April 27, 1984.

Stralow, Martin J., P.E. Letter to Mr. Donald Richardson regarding Permit #17985. Dated May 15, 1984.

State of Illinois Department of Transportation Division of Water Resources. Permit No. 17985. Dated May 15, 1974.

Hanson Engineers. “Flyash Pond, Hutsonville Power Station; Central Illinois Public Service Company.” Figure No. 1. Undated.

Anonymous. “Hutsonville Fly-Ash Pond Stability Analysis; Simplified Bishop Method.” Figure 1. Undated.

Canonie Contruction Company. Boring Log for Boring No. B-2. Dated August 9, 1983.

Canonie Contruction Company. Boring Log for Boring No. B-4. Dated August 9, 1983.

Canonie Contruction Company. Boring Log for Boring No. B-5. Dated August 9, 1983.

Magstaff, Mike, P.E. and Bluemner, Steve, P.E. Inspection Form for Dams, Levees and Ponds at Ameren Facilities. Dated March 18, 2010. Pages 1-14.

Hanson Engineers. “General Plan; Interim Ash and Drainage Collection Ponds; Hutsonville, Illinois.” Drawing No. S366. Dated May 22, 2000.

Hanson Engineers. “Typical Sections; Interim Ash and Drainage Collection Ponds; Hutsonville, Illinois.” Drawing No. S367. Dated May 22, 2000.

Hanson Engineers. “New Decant Structure; Interim Ash and Drainage Collection Ponds; Hutsonville, Illinois.” Drawing No. S368. Dated May 22, 2000.

Hanson Engineers/ “Fly Ash Sludge Line; Interim Ash and Drainage Collection Ponds; Hutsonville, Illinois.” Drawing No. S369. Dated May 22, 2000.

Hanson Engineers. “Bottom Ash-Slide Gate-Connecting Pipe; Interim Ash and Drainage Collection Ponds; Hutsonville, Illinois.” Drawing No. S370. Dated May 22, 2000.

Hanson Engineers. “Outlet Pipe and Site Drainage Plan; Interim Ash and Drainage Collection Ponds; Hutsonville, Illinois.” Drawing No. S371. Dated May 22, 2000.

Hanson Engineers. “Coal Pile Drainage, Sections, and Details; Interim Ash and Drainage Collection Ponds; Hutsonville, Illinois.” Drawing No. S372. Dated May 22, 2000.

Hanson Engineers. “Roads, Ramps, Fences/Gates and Utilities; Interim Ash and Drainage Collection Ponds; Hutsonville, Illinois.” Drawing. No. S373. Dated May 22, 2000.

Hanson Engineers. “Structural General Notes; Interim Ash and Drainage Collection Ponds; Hutsonville, Illinois.” Drawing No. S374. Dated May 22, 2000.

Hanson Engineers. “Pump Station Plan, Sections & Detail; Interim Ash and Drainage Collection Ponds; Hutsonville, Illinois.” Drawing No. S375. Dated May 22, 2000,

Hanson Engineers. “Site Layout Plan; Interim Ash and Drainage Collection Ponds; Hutsonville, Illinois.” Drawing No. S376. Dated May 22, 2000.

Hanson Engineers. “Pump Station & Shear Gate Sections & Details; Interim Ash and Drainage Collection Ponds; Hutsonville, Illinois.” Drawing No. S377. Dated May 22, 2000.

Hanson Engineers. “Electrical Symbols and Legends; Interim Ash and Drainage Collection Ponds; Hutsonville, Illinois.” Drawing No. E805. Dated May 22, 2000.

Hanson Engineers. “Electrical Site Plan; Interim Ash and Drainage Collection Ponds; Hutsonville, Illinois.” Drawing So. E806. Dated May 22, 2000.

Hanson Engineers. “Electrical One Line Diagram and Details; Interim Ash and Drainage Collection Ponds; Hutsonville, Illinois.” Drawing No. E 807. Dated May 22, 2000.

Hanson Engineers. “Electrical Plans, Sections and Elevations; Interim Ash and Drainage Collection Ponds; Hutsonville, Illinois.” Drawing No. E808. Dated May 22, 2000.

Hanson Engineers. “Pump Control Schematic; Interim Ash and Drainage Collection Ponds; Hutsonville, Illinois.” Drawing No. E809. Dated May 22, 2000.

Central Illinois Public Service Company. *Instructions to Bidders*. Specification No. 0501-02. Undated.

Specification 0501-02 - Fly Ash Pond Piping. Undated.

Specification 0501-02 – Pond A. Undated

Bremer, C.A., Piening, R.O., Schukar, C.J. Specification – Pond B & C. HEI # 99S3062. Undated.

APPENDIX E

PREVIOUS INSPECTION REPORTS

Inspection Form for Dams, Levees and Ponds at Ameren Facilities

Project Name: Annual Engineering Inspection

Location: Hutsonville Power Plant

Inspection Date: 03/18/2010
Temperature: 50's
Weather: Sunny

System Description:	Ash Pond A	Pond A Level:	Normal
	Ash Pond B	Pond B Level	Normal
	Ash Pond C	Pond C Level	Normal
	Inactive Ash Pond D	Pond D Level	Normal
	Bottom Ash Pond	Bottom Ash Pond	Normal

Engineer/Inspectors:
Mike Wagstaff, P.E.
Steve Bluemner, P.E.

Owner Representatives:
Jim Grunloh
Jim Alberda

CONFIDENTIAL

Overall System Rating: **Minimally Acceptable**

System Rating Codes

Acceptable System: Nearly all items or components are rated as GC or NE.

Minimally Acceptable System: One or more items are rated as MM or one or more items are rated as IM or EC and an engineering determination concludes that the IM or EC items would not prevent the system from performing as intended.

Unacceptable System: One or more items are rated as IM or EC and would prevent the system from performing as intended, or a serious deficiency noted in past inspections (which had previously resulted in a minimally acceptable system rating) has not been corrected within the established timeframe, not to exceed two years.

Condition Codes

EC = Emergency Condition. A serious dam safety condition exists that needs immediate action. Emergency measures implemented as instructed by Supervising Engineer, Dam Safety; i.e. pool draw down, work stoppage, or plant stoppage.

IM = Item needing Immediate Maintenance to restore or ensure its safety or integrity. Remediation should be completed within an appropriate timeframe as determined by the Supervising Engineer, Dam Safety.

MM = Item needing Minor Maintenance and/or repairs within the year. The safety or integrity of the item is not yet imperiled.

OB = Condition requires regular Observation to ensure that the condition does not become worse.

GC = Good Condition.

NE = No Evidence of a problem.

NI = Not Inspected. Reason should be stated in comment

CONFIDENTIAL

	Item	Condition Code *	Deficiencies	Recommended Remedial Measures and Implementation Schedule
Inlet and Outlet	**Obstruction**	**NE**		
	Inlet Piping Supports	**GC**	Inlet pipe and supports are in good condition.	
	Leakage	**NE**	Leakage at the HDPE liner is not evident. The concrete outfall structure does not appear to be cracked or leaking.	
	Outfall Structure Condition	**GC**	Outlet structure is in good condition (see photo #5).	
	Outfall Pipe	**NI**	Outlet pipe is not visible.	
	Other	**MM**	Staff gauge is required to identify changes in water level.	Provide staff gauge at outfall structure.
Earth Embankment	**Vertical & Horizontal Alignment of Crest**	**GC**	The alignment does not show signs of shifting or settlement.	
	Animal Control	**NE**	Animal burrows were not identified.	
	Surface Cracks	**NE**	Surface cracks were not identified.	
	Pond Liner	**GC**	Liner appears to be intact. Previous tears in the HDPE liner have been repaired.	
	Seepage	**NE**	There is no evidence of seepage.	
	Erosion	**GC**	No erosion of slopes is evident.	
	Slope Stability	**GC**	Slopes are in good condition.	
	Vegetation	**GC**	Slopes have been mowed and appear to have been mowed at least once per year. There are no trees on the slopes of the berms or within 20 feet of the toe.	
	Unusual Movement or Cracking At or Beyond Toe	**NE**		
	Other	**MM**	Pond appears to be near capacity. Stacking of ash has reduced the freeboard from 2 feet (recommended) to less than 1 foot in some areas around the edge of the pond. If goetubes are to be left in place, recommend removing ash from the perimeter ditches (pond interior) to re-establish drainage between the edge of pond and geotubes. See photos #1, #2, #3, and #4.	Re-grade ditches around interior perimeter of pond.

Hutsonville Power Plant
Ash Pond B

Annual Engineering Inspection Checksheet

Inspection Date: 03/18/2010

CONFIDENTIAL

	Item	Condition Code *	Deficiencies	Recommended Remedial Measures and Implementation Schedule
Inlet and Outlet	Obstruction	NE		
	Inlet Piping Supports	GC	Inlet pipe and supports are in good condition.	
	Leakage	NE	Leakage at the HDPE liner is not evident. The concrete outfall structure does not appear to be cracked or leaking.	
	Outfall Structure Condition	GC	Outlet structure is in good condition (see photo #6).	
	Outfall Pipe	NE	Outlet pipe is not visible.	
	Other		Staff gauge is required to identify changes in water level.	Provide staff gauge.
Earth Embankment	Vertical & Horizontal Alignment of Crest	GC	The alignment did not show signs of shifting or settlement.	
	Animal Damage	NE	Animal burrows were not identified.	
	Surface Cracks	NE	Surface cracks were not identified.	
	Pond Liner	GC	HDPE pond liner is in good condition.	
	Seepage	NE	There is no evidence of seepage.	
	Erosion	GC	No erosion of slopes is evident.	
	Slope Stability	GC	Slopes are in good condition.	
	Vegetation	GC	Slopes have been mowed and appear to have been mowed at least once per year. There are no trees on the slopes of the berms or within 20 feet of the toe. See photos #7 and #8.	
	Unusual Movement or Cracking At or Beyond Toe	NE		
	Other			

Hutsonville Power Plant
Ash Pond C

Annual Engineering Inspection Checksheet

CONFIDENTIAL

	Item	Condition Code *	Deficiencies	Recommended Remedial Measures and Implementation Schedule
Inlet and Outlet	**Obstruction**	**NE**		
	Inlet Piping Supports	**GC**	Inlet pipe and supports are in good condition.	
	Leakage	**NE**	Leakage at the HDPE liner is not evident. The concrete structure does not appear to be cracked or leaking.	
	Outfall Structure Condition	**GC**	Outlet structure (pump station) is in good condition.	
	Outfall Pipe	**NE**	Outlet pipe is not visible.	
	Other			
Earth Embankment	**Vertical & Horizontal Alignment of Crest**	**GC**	The alignment did not show signs of shifting or settlement.	
	Animal Damage	**NE**	Animal burrows were not identified.	
	Surface Cracks	**NE**	Surface cracks were not identified.	
	Pond Liner	**GC**	Liner appears to be intact. Previous tears/seam rips in the HDPE liner have been repaired.	
	Seepage	**NE**	There is no evidence of seepage.	
	Erosion	**GC**	No erosion of slopes is evident.	
	Slope Stability	**GC**	Slopes are in good condition.	
	Vegetation	**GC**	Slopes have been mowed and appear to have been mowed at least once per year. There are no trees on the slopes of the berms or within 20 feet of the toe.	
	Unusual Movement or Cracking At or Beyond Toe	**NE**		
	Other			

Hutsonville Power Plant
Inactive Ash Pond D

CONFIDENTIAL

Inspection Date: 03/18/2010

	Item	Condition Code *		
Inlet and Outlet	**Obstruction**	**NE**		
	Inlet Piping Supports	**n/a**	Fly Ash is not currently being sluiced into Ash Pond D.	
	Leakage	**GC**	The wooden stoplogs are leaking a little.	
	Outfall Structure Condition	**OB**	Outlet structure is in poor condition. The walkway is loose and rusting. Water level is 2-3 feet below the top of the levee.	Pond is inactive. If capping of the pond is not done in the near future, maintenance on the walkway should be performed or it should be removed.
	Outfall Pipe	**OB**	Outlet pipe is not visible. The ash pond is currently inactive. The outlet pipe has not been plugged and storm water/leakage is currently entering the outfall pipe.	Pond is inactive. If capping of the pond is not done in the near future, the pipe should be inspected for deterioration.
	Other			
Earth Embankment	**Vertical & Horizontal Alignment of Crest**	**GC**	The alignment did not show signs of shifting or settlement.	
	Animal Damage	**NE**	Animal burrows were not evident.	
	Surface Cracks	**NE**	Surface cracks were not evident.	
	Pond Liner	**n/a**	Pond not lined with HDPE liner.	
	Seepage	**NI**	The Wabash River had recently flooded and the ground adjacent to the toe of levee was saturated, making it difficult to observe seepage at the toe. There is no obvious or excessive seepage at the time of inspection.	AER to re-inspect levee for seepage when river recedes and ground adjacent to toe dries out.
	Erosion	**GC**	No erosion of slopes is evident.	
	Slope Stability	**GC**	Slopes are in good condition.	
	Vegetation	**GC**	Brush and trees have been removed from the berm. Seeding in some areas is a bit sparse. See photos #9 and #10.	
	Unusual Movement or Cracking At or Beyond Toe	**NE**	Sloughing or cracking was not evident.	
	Other			

Inspection Date: 03/18/2010

	Item	Condition Code *	Deficiencies	Recommended Remedial Measures and Implementation Schedule
Inlet and Outlet	Obstruction	NE		
	Inlet Piping Supports	GC	Inlet pipe and supports are in good condition.	
	Leakage	NE	Leakage at inlet/outlet is not evident.	
	Outfall Structure Condition	n/a	No structure.	
	Outfall Pipe	GC	Outlet pipe is in good condition.	
	Other		Staff gauge is required to identify sudden changes in water level.	Provide staff gauge.
Earth Embankment	Vertical & Horizontal Alignment of Crest	GC	The alignment of the east berm did not show signs of shifting or settlement.	
	Animal Damage	NE	Animal burrows were not identified.	
	Surface Cracks	NE	Surface cracks were not identified.	
	Pond Liner	n/a	Pond not lined with HDPE liner.	
	Seepage	NI	The Wabash River had recently flooded and the ground adjacent to the toe of levee was saturated, making it difficult to observe seepage at the toe. There is no obvious or excessive seepage at the time of inspection. See photo #13.	AER to re-inspect levee for seepage when river recedes and ground adjacent to toe dries out.
	Erosion	GC	No erosion of slopes is evident.	
	Slope Stability	GC	Slopes are in good condition.	
	Vegetation	GC	Brush and trees have been removed from the berm. Seeding in some areas is a bit sparse. See photo #11.	
	Unusual Movement or Cracking At or Beyond Toe	NE	Sloughing or cracking was not evident, but further inspection is required after clearing of the slope.	Reinspect after trees and brush are removed from the east berm.
	Other		See photo #12.	

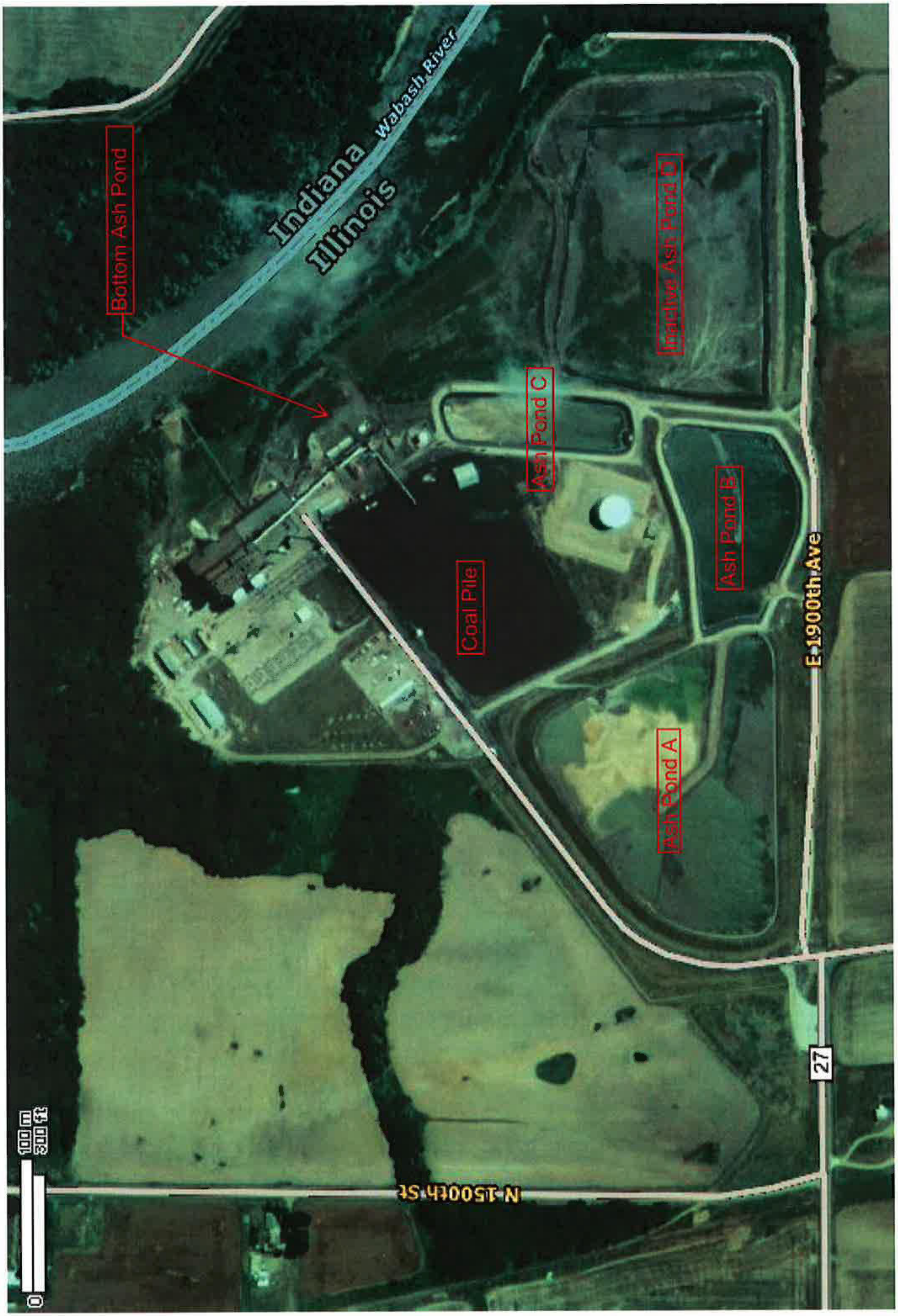

CONFIDENTIAL

Photo #1 – Ash Pond A – North berm looking northeast

Photo #2 – Ash Pond A – East berm looking north

Photo #3 – Ash Pond A – East berm looking south

Photo #4 – Ash Pond A - East berm looking south

Photo #5 - Ash Pond A – Outlet structure

Photo #6 – Ash Pond B – Outlet structure

Photo #7 – Ash Pond B – South embankment looking west to Pond A in background

Photo #8 – Ash Pond B – South embankment looking west to Pond D in background

Photo #9 – Ash Pond D - South berm looking east

Photo #10 – Ash Pond D - East berm looking southeast

Photo #11 – Bottom Ash Pond – Northeast berm looking south

Photo #12 – Bottom Ash Pond – North end looking south

Photo #13 – Bottom Ash Pond - East berm looking south

APPENDIX F

PHOTOGRAPHS

Client Name: U.S. EPA	**Site Location:** **Hutsonville Power Station** **Hutsonville, Illinois**	**Project No.** **01.0170142.30**

Photo No. **1**

Date: 6/2/11

Direction Photo Taken:
West

Description:
Upstream slope and crest of Pond A.

Photo No. **2**

Date: 6/2/11

Direction Photo Taken:
West

Description:
Upstream slope and crest of Pond A.

Photo No.
3

Date:
6/2/11

Direction Photo Taken:
East

Description:
Upstream slope and crest of Pond A.

Photo No.
4

Date:
6/2/11

Direction Photo Taken:
North

Description:
Upstream slope and discharge pipe in Pond A.

Client Name: U.S. EPA	**Site Location: Hutsonville Power Station Hutsonville, Illinois**	**Project No.** **01.0170142.30**

Photo No. **5**

Date: 6/2/11

Direction Photo Taken:
Northeast

Description:
Upstream slope and crest of Pond A.

Photo No. **6**

Date: 6/2/11

Direction Photo Taken:
Northeast

Description:
Upstream slope and crest of Pond A.

Photo No. **7**

Date: 6/2/11

Direction Photo Taken:
Southwest

Description:
Upstream slope and crest of Pond A.

Photo No. **8**

Date: 6/2/11

Direction Photo Taken:
Southeast

Description:
Upstream slope and crest of Pond A.

Client Name: U.S. EPA

Site Location: Hutsonville Power Station
Hutsonville, Illinois

Project No.
01.0170142.30

Photo No. 9 **Date:** 6/2/11

Direction Photo Taken:
South

Description:
Upstream slope and crest of Pond A.

Photo No. 10 **Date:** 6/2/11

Direction Photo Taken:
South

Description:
Upstream slope and crest of Pond A.

Client Name: U.S. EPA

Site Location: Hutsonville Power Station
Hutsonville, Illinois

Project No. 01.0170142.30

Photo No. 11 **Date:** 6/2/11

Direction Photo Taken:
South

Description:
Downstream slope of Pond A.

Photo No. 12 **Date:** 6/2/11

Direction Photo Taken:
South

Description:
Downstream slope of Pond A.

Client Name: U.S. EPA	**Site Location: Hutsonville Power Station Hutsonville, Illinois**	**Project No.** 01.0170142.30

Photo No. **13**

Date: 6/2/11

Direction Photo Taken:
Southwest

Description:
Downstream slope of Pond A.

Photo No. **14**

Date: 6/2/11

Direction Photo Taken:
Southwest

Description:
Downstream slope of Pond A.

Client Name: U.S. EPA	**Site Location:** Hutsonville Power Station Hutsonville, Illinois	**Project No.** 01.0170142.30

Photo No. 15

Date: 6/2/11

Direction Photo Taken:
North

Description:
Downstream slope of Pond A.

Photo No. 16

Date: 6/2/11

Direction Photo Taken:
East

Description:
Downstream slope of Pond A.

Client Name: U.S. EPA	**Site Location:** Hutsonville Power Station Hutsonville, Illinois	**Project No.** 01.0170142.30

Photo No. 17 **Date:** 6/2/11

Direction Photo Taken:
East

Description:
Downstream slope of Pond A.

Photo No. 18 **Date:** 6/2/11

Direction Photo Taken:
West

Description:
Downstream slope of Pond A.

Client Name: U.S. EPA	**Site Location:** Hutsonville Power Station Hutsonville, Illinois	**Project No.** 01.0170142.30

Photo No. 19

Date: 6/2/11

Direction Photo Taken:
Northwest

Description:
Downstream slope of Pond A.

Photo No. 20

Date: 6/2/11

Direction Photo Taken:
Northeast

Description:
Decant structure in Pond A.

Client Name: U.S. EPA	**Site Location:** **Hutsonville Power Station** **Hutsonville, Illinois**	**Project No.** 01.0170142.30

Photo No. **21** **Date:** 6/2/11

Direction Photo Taken:
West

Description:
Decant structure in Pond A.

Photo No. **22** **Date:** 6/2/11

Direction Photo Taken:
Northeast

Description:
Discharge pipe in Pond A.

Client Name: U.S. EPA	**Site Location: Hutsonville Power Station Hutsonville, Illinois**	**Project No.** 01.0170142.30

Photo No. 23

Date: 6/2/11

Direction Photo Taken:
West

Description:
Upstream slope and crest of Pond B.

Photo No. 24

Date: 6/2/11

Direction Photo Taken:
Southwest

Description:
Upstream slope and crest of Pond B.

Client Name: U.S. EPA	**Site Location:** Hutsonville Power Station Hutsonville, Illinois	**Project No.** 01.0170142.30

Photo No. 25

Date: 6/2/11

Direction Photo Taken:
Southeast

Description:
Upstream slope of Pond B.

Photo No. 26

Date: 6/2/11

Direction Photo Taken:
South

Description:
Upstream slope and crest of Pond B.

Photo No. 27

Date: 6/2/11

Direction Photo Taken:
West

Description:
Upstream slope and crest of Pond B.

Photo No. 28

Date: 6/2/11

Direction Photo Taken:
Northeast

Description:
Upstream slope and crest of Pond B.

Client Name: U.S. EPA

Site Location: Hutsonville Power Station
Hutsonville, Illinois

Project No.
01.0170142.30

Photo No. 29

Date: 6/2/11

Direction Photo Taken:
South

Description:
Upstream slope of Pond B.

Photo No. 30

Date: 6/2/11

Direction Photo Taken:
Southeast

Description:
Downstream slope of Pond B.

Client Name: **U.S. EPA**	**Site Location:** **Hutsonville Power Station** **Hutsonville, Illinois**	**Project No.** **01.0170142.30**

Photo No. **31** **Date:** 6/2/11

Direction Photo Taken:
Southeast

Description:
Downstream slope of Pond B.

Photo No. **32** **Date:** 6/2/11

Direction Photo Taken:
West

Description:
Downstream slope of Pond B.

Client Name: **U.S. EPA**	**Site Location:** **Hutsonville Power Station** **Hutsonville, Illinois**	**Project No.** **01.0170142.30**

Photo No. **33**

Date: 6/2/11

Direction Photo Taken:
Northeast

Description:
Downstream slope of Pond B.

Photo No. **34**

Date: 6/2/11

Direction Photo Taken:
Northeast

Description:
Downstream slope of Pond B.

Client Name: U.S. EPA	**Site Location:** **Hutsonville Power Station** **Hutsonville, Illinois**	**Project No.** 01.0170142.30

Photo No. **35**

Date: 6/2/11

Direction Photo Taken:
West

Description:
Decant structure in Pond B.

Photo No. **36**

Date: 6/2/11

Direction Photo Taken:
West

Description:
Decant structure in Pond B.

Client Name: U.S. EPA	**Site Location: Hutsonville Power Station Hutsonville, Illinois**	**Project No.** 01.0170142.30

Photo No. 37

Date: 6/2/11

Direction Photo Taken:
North

Description:
Location of discharge pipe from Pond A. At time of inspection no water was flowing through the pipe to support excavation and maintenance of the pipe.

Photo No. 38

Date: 6/2/11

Direction Photo Taken:
South

Description:
Discharge pipe from the facility.

Client Name: U.S. EPA	**Site Location: Hutsonville Power Station Hutsonville, Illinois**	**Project No.** 01.0170142.30

Photo No. **39**

Date: 6/2/11

Direction Photo Taken:
North

Description:
Pond C as seen from south.

Photo No. **40**

Date: 6/2/11

Direction Photo Taken:
South

Description:
Pond C as seen from north.

Client Name: U.S. EPA	**Site Location: Hutsonville Power Station Hutsonville, Illinois**	**Project No.** 01.0170142.30

Photo No. 41 **Date:** 6/2/11

Direction Photo Taken:
East

Description:
Crest of the closed portion of Pond D as seen from the southwest corner.

Photo No. 42 **Date:** 6/2/11

Direction Photo Taken:
East

Description:
Downstream slope of the closed portion of Pond D as seen from the southeast corner.

Client Name: U.S. EPA	**Site Location: Hutsonville Power Station** **Hutsonville, Illinois**	**Project No.** **01.0170142.30**

Photo No. **43** **Date:** 6/2/11

Direction Photo Taken:
North

Description:
Crest of the closed portion of Pond D.

Photo No. **44** **Date:** 6/2/11

Direction Photo Taken:
Southeast

Description:
Upstream slope, crest and discharge pipes in the active portion of Pond D.

Client Name: **U.S. EPA**	**Site Location:** **Hutsonville Power Station** **Hutsonville, Illinois**	**Project No.** **01.0170142.30**

Photo No. **45**

Date: 6/2/11

Direction Photo Taken:
Northeast

Description:
Upstream slope and discharge pipe in active portion of Pond D.

Photo No. **46**

Date: 6/2/11

Direction Photo Taken:
East

Description:
Upstream slope, crest, and discharge pipe in the active portion of Pond D.

Client Name: U.S. EPA	**Site Location: Hutsonville Power Station Hutsonville, Illinois**	**Project No.** 01.0170142.30

Photo No. 47 **Date:** 6/2/11

Direction Photo Taken:
South

Description:
Upstream slope and crest and in active portion of Pond D

Photo No. 48 **Date:** 6/2/11

Direction Photo Taken:
Southeast

Description:
Upstream slope and crest in active portion of Pond D.

Client Name: **U.S. EPA**	**Site Location:** **Hutsonville Power Station** **Hutsonville, Illinois**	**Project No.** **01.0170142.30**

Photo No. **49**

Date: 6/2/11

Direction Photo Taken:
Southwest

Description:
Upstream slope and discharge structure in Pond D.

Photo No. **50**

Date: 6/2/11

Direction Photo Taken:
Northwest

Description:
Upstream slope in Pond D.

Client Name: U.S. EPA	**Site Location: Hutsonville Power Station Hutsonville, Illinois**	**Project No.** 01.0170142.30

Photo No. **51**

Date: 6/2/11

Direction Photo Taken:
Northeast

Description:
Upstream slope in the active portion of Pond D.

Photo No. **52**

Date: 6/2/11

Direction Photo Taken:
West

Description:
Decant structure in the active portion of Pond D.

Client Name: U.S. EPA	**Site Location: Hutsonville Power Station** **Hutsonville, Illinois**	**Project No.** 01.0170142.30

Photo No. 53 **Date:** 6/2/11

Direction Photo Taken:
East

Description:
Decant structure in the active portion of Pond D.

Photo No. 54 **Date:** 6/2/11

Direction Photo Taken:
East

Description:
Discharge pipe in active portion of Pond D.

Client Name: U.S. EPA	**Site Location: Hutsonville Power Station** **Hutsonville, Illinois**	**Project No.** **01.0170142.30**

Photo No. **55**

Date: 6/2/11

Direction Photo Taken:
Southwest

Description:
Discharge pipe in active portion of Pond D.

Photo No. **56**

Date: 6/2/11

Direction Photo Taken:
Southeast

Description:
Discharge pipe in active portion of Pond D.

Illinois Pollution Control Board
R2014-10

T. Barkley: Exhibit J

COAL ASH IMPOUNDMENT
SITE ASSESSMENT FINAL REPORT

Marion Power Station
Southern Illinois Power Cooperative
Marion, Illinois

Prepared by:

KLEINFELDER
Bright People. Right Solutions.

611 Corporate Circle, Suite C
Golden, CO 80401

KLEINFELDER PROJECT NUMBER 118953-5

February 28, 2013

I acknowledge that the management units referenced herein:

- Pond 1 (Bottom Ash Impoundment)
- Pond 2 (Bottom Ash Impoundment)
- Pond 4 (Bottom Ash Impoundment)

Were assessed on May 25, 2011

Signature: Date: 2/28/13

Steven A. Wendland, P.E.
Geotechnical Engineer

EXECUTIVE SUMMARY

Background information taken from the U. S. Environmental Protection Agency's (EPA's) website:

> "Following the December 22, 2008 dike failure at the TVA/Kingston, Tennessee coal combustion waste (CCW) ash pond dredging cell that resulted in a spill of over 1 billion gallons of coal ash slurry, covered more than 300 acres and impacted residences and infrastructure, the EPA is embarking on an initiative to prevent the catastrophic failure from occurring at other such facilities located at electric utilities in an effort to protect lives and property from the consequences of a impoundment or impoundment failure of the improper release of impounded slurry."

As part of the EPA's effort to protect lives and the environment from a disaster similar to that experienced in 2008, Kleinfelder was contracted to perform a site assessment at the Marion Power Generating Station that is owned and operated by the Southern Illinois Power Cooperative. This report summarizes the observations and findings of the site assessment that occurred on May 25, 2011.

The coal combustion waste impoundments observed during the site assessment included:

- Pond 1 (Bottom Ash Impoundment)
- Pond 2 (Bottom Ash Impoundment)
- Pond 4 (Bottom Ash Impoundment)

Preliminary observations made during the site assessment are documented on the Site Assessment Checklist presented in Appendix A. A copy of this checklist was transmitted to the EPA following the field walk-through. A more detailed discussion of the observations is presented in Section 4, "Site Observations".

Ponds 1, 2 and 4 are currently classified as Class III (Low Hazard) dams by the Illinois Department of Natural Resources.

Overall, the site is reasonably well maintained and operated with very few areas of concern as discussed in Section 6, “Recommendations”.

On the date of this site assessment, there appeared to be no immediate threat to the safety of the impoundments. No assurance can be made regarding the impoundments condition after this date. Subsequent adverse weather and other factors may affect the condition.
A brief summary of the Priority 1 and 2 Recommendations is given below. A more detailed discussion is provided in Section 6, “Recommendations”.

Priority 1 Recommendations

1. Perform repairs to the eroded soil and riprap under the catwalk foundation at the Little Saline Creek outfall.
2. Perform a stability analysis of the impoundment embankments, including static and seismic loading conditions, use of representative soil characteristics obtained by soil sampling, and a liquefaction potential analysis if a qualitative analysis of representative soil sampling warrants such potential analysis.
3. Complete a hydrologic and hydraulic analysis for the site, including an overtopping analysis.

Priority 2 Recommendations

1. Develop an Operation and Maintenance (O&M) manual for the impoundments.

Table of Contents

EXECUTIVE SUMMARY 2

SECTION 1 – INTRODUCTION 6
1.1 General 6
1.2 Project Location 6
1.3 Site Documentation 6

SECTION 2 – SITE ASSESSMENT 7
2.1 Attendees 7
2.2 Impoundments Assessed 7
2.3 Weather During Assessment 8

SECTION 3 – SITE INFORMATION AND HISTORY 9
3.1 Site Information and History 9
3.2 Pertinent Data 11
3.3 Regional Geology and Seismicity 15
3.4 Hydrology and Hydraulics 15
3.5 Geotechnical Considerations 15
3.6 Structural Considerations 16
3.7 Performance Evaluations 16
3.8 Hazard Classification 17
3.9 Site Access 17

SECTION 4 – SITE OBSERVATIONS 18
4.1 Pond 1 (Bottom Ash Impoundment) 18
4.1.1 Upstream Slope 18
4.1.2 Crest 19
4.1.3 Outlet Works 19
4.1.4 Impoundment Inlet 19
4.2 Pond 2 (Bottom Ash Impoundment) 20
4.2.1 Upstream Slope 20
4.2.2 Crest 20
4.2.3 Outlet Works 21

4.2.4 Impoundment Inlet **21**
4.3 Pond 4 (Bottom Ash Impoundment) **21**
4.3.1 Upstream Slope **21**
4.3.2 Crest **22**
4.3.3 Outlet Works **22**
4.3.4 Impoundment Inlet **22**
4.4 Other ..... Error! Bookmark not defined.

SECTION 5 – OVERALL CONDITION OF THE FACILITY IMPOUNDMENTS **38**
5.1 Analysis and Conclusions **38**
5.2 Summary Statement **39**

SECTION 6 – RECOMMENDATIONS **40**
6.1 Priority 1 Recommendations **40**
6.2 Definitions **40**

SECTION 7 – GLOSSARY OF TERMS **41**

SECTION 8 – REFERENCES **44**

SECTION 9 – LIMITATIONS **45**

List of Figures

Figure 1 Marion Power Station Vicinity Map
Figure 2 Marion Power Station Aerial Map
Figure 3 Typical Cross Section – Ash Ponds
Figure 4 Photo Plan of Assessment Points – General Facility

List of Appendices

Appendix A Site Assessment Checklists
Appendix B Response Letter to the EPA's Section 104(e) Request for Information
Appendix C Documents Provided for Review

SECTION 1 – INTRODUCTION

1.1 General

This report has been prepared for the United States Environmental Protection Agency (EPA) to document findings and observations from a site assessment at the Marion Power Station on May 25, 2011.

The following sections present a summary of data collection activities, site information, performance history of the facility's impoundment ponds, a summary of site observations, and recommendations resulting from the site investigation.

1.2 Project Location

The Marion Power Generating Station is located on the northwestern bank of the Lake of Egypt approximately eight miles south of Marion, Illinois as shown in Figure 1. The Marion Power Generating station is located in Williamson County at approximately 37^{o}37'11'' N and 88^{o}57'11'' W. In general, the area surrounding the Marion Generating Station is a rural agricultural community with the nearest downstream town being Creal Springs with a population hovering around 1,000 people.

1.3 Site Documentation

Southern Illinois Power Cooperative (SIPCO) provided the following documents during the time of this assessment to aid in the review of the impoundments:

- Burns and McDonnell, As Built Drawings Sheet 30, 1962
- Southern Illinois Power Cooperative, North Pond Disposal Area Site Plan Underground Utilities Drawing, March 17, 2003

SECTION 2 – SITE ASSESSMENT

2.1 Attendees

The site assessment was performed on May 25, 2011 by Brian Havens, P.E. and Matt Gardella, E.I.T. of Kleinfelder. Other persons present during the site assessment included:

- Leonard Hopkins, P.E. – Southern Illinois Power Cooperative
- James Webb, P.E. – Southern Illinois Power Cooperative
- Jason McLaurin – Southern Illinois Power Cooperative

2.2 Impoundments Assessed

Impoundments and associated structures that were observed during the site assessment included:

- Pond 1 (Bottom Ash Impoundment) – Commissioned in 1963
- Pond 2 (Bottom Ash Impoundment) – Commissioned in 1963
- Pond 4 (Bottom Ash Impoundment) – Commissioned in 1963

Observations from the site assessment are documented on the Site assessment Evaluation Checklists presented in Appendix A. A summary of observations from the site assessment is presented in Section 4.

Several additional impoundments exist at the site as shown on Figure 2. We stated in the draft report that these ponds were not evaluated by our firm because they contained "residuals from flue gas emission controls with no coal combustion wastes". The phrase "residuals from flue gas emission controls" comes directly from the SIPCO response letter dated January 5, 2011 to a request for information from Mr. Craig Dufficy with USEPA. In this case, SIPCO has indicated that the "residuals" are actually small quantities of process water that contain some chemical characteristics such as calcium sulfate originating from the flue gas desulfurization (FGD) process. The FGD process results in creation of a gypsum scrubber cake that is dewatered and then handled dry (not pumped to a pond). Water from this dewatering process is pumped back into the FGD system, but a small amount of this water leaks out from the FGD system and is collected in a holding pond on the south side of the power plant. This smaller quantity of “residual” water is then mixed with a larger quantity of stormwater as it travels through a series of ponds and is eventually transported off site. The additional impoundments that we did not evaluate are listed below:

- South Fly Ash Pond
- Fly Ash Disposal Pond B-3
- Pond A-1
- Pond S-1
- Pond 3A
- Pond 3
- Pond S-6
- Pond S-2
- Pond S-3

2.3 Weather During Assessment

During the assessment of the Marion Power Station impoundments, the weather was cloudy with intermittent rain. Temperatures ranged from 75° to 80° Fahrenheit and wind ranged from 0 to 5 miles per hour (mph).

SECTION 3 – SITE INFORMATION AND HISTORY

3.1 Site Information and History

The Marion Power Generating Station is a coal fired facility that has been in operation since 1963. The facility currently sluices Bottom Ash, a by-product of coal fired energy generation, into one of two impoundments. These impoundments are referred to as “Pond 1” and “Pond 2”. An aerial image of these impoundments can be seen in Figure 2. These ponds act as a primary settling basin for bottom ash prior to the water being transferred into “Pond 4”, which acts as a final clarification pond, and then being released into Little Saline Creek. Currently the bottom ash residual produced at the facility is removed from Ponds 1 and 2, and then sold to various organizations for beneficial use such as roof shingle sand.

It should be noted that fly ash produced at the Marion Power Generating Station is handled dry and is never settled out in a manner similar to the bottom ash. Also, gypsum is produced at this facility and is sold for beneficial use to various commercial entities for various purposes. Gypsum is sluiced only in overflow and emergency situations into nearby ponds and is immediately cleaned out of the ponds as soon as practical.

Ponds 1 and 2 were originally constructed with an earthen embankment that has been filled against the downstream (north) side to effectively create a large stability berm for the embankment. The ground surface in the filled area north of the embankment slopes downstream with about 20 feet of elevation drop over about 600 feet of length. Figure 3 displays cross sections of Ponds 1 and 2 taken from the supplied as-built drawings. Steel sluice pipes transporting bottom ash from power generating operations outlet at the southeastern corner of both Pond 1 and Pond 2. Once this sluiced material is deposited into either Pond 1 or Pond 2 the decanted water is transferred via outlet pipe culverts into Pond 4. The outlet pipes for Pond 1 are located close to the northwest corner of the impoundment with varying inlet elevations. These culverts were noted as being plastic pipes, one 12-inch and one 18-inch pipe, with the 18-inch plastic pipe having a lower intake elevation. The outlet pipe for Pond 2 is located close to the southwest corner of the impoundment. This culvert was noted as being a steel pipe 12-inches in diameter.

The intention of Ponds 1 and 2 is to allow additional time for suspended solids to drop out of suspension before entering Pond 4 where they are harder to collect and remove for drying. Two impoundments (Ponds 1 and 2) were implemented so that one could be used for processing sluiced material, while the other impoundment is drained and cleaned of its impounded solids. This process can be alternated as necessary to ensure continuous operation.

Pond 4 is located to the west of Ponds 1 and 2. We were not provided with design documentation for this pond, but we suspect that it was constructed in a similar fashion as Ponds 1 and 2 by constructing an earthen embankment across a valley. Similar to Ponds 1 and 2, Pond 4 has been filled against the downstream (north) side to effectively create a large stability berm for the impoundment. The ground surface in the filled area north of the impoundment slopes downstream with about 20 feet of elevation drop over about 370 feet of length. Inflow into Pond 4 is limited to the outlet pipes from Ponds 1, 2 and any natural rainfall runoff that may occur. Pond 4 acts as a final clarification pond allowing any additional suspended solids in the impounded water to drop out of suspension before discharging to the Little Saline Creek. One key component of Pond 4 is the pond's outlet. The outlet of the Pond 4 is located near the northwestern corner of the pond, and consists of a vertical pipe at a set elevation. Surrounding this vertical pipe is a large amount of riprap intended as an additional measure to protect water quality before being discharged from Pond 4. The size and type of the vertical outlet pipe is unknown as it was inundated at the time of assessment and record drawings provided for review did not describe it. After entering the outlet pipe water travels approximately 950 feet to the outfall location for the ponds which is a small concrete and steel structure. This structure is approximately 4-feet by 8-feet and contains a sluice gate and water quality monitoring equipment. After passing through this structure, water flows over riprap and into Little Saline Creek.

None of the impoundments discussed herein has an emergency spillway in place.

In reviewing the response letter to the EPA's section 104(e) request for information, shown in Appendix C, it was noted that there has not previously been a release of impounded water at the Marion Power Generating Station.

3.2 Pertinent Data

A. GENERAL

1. Name.. Marion Power Generating Station
2. State ....Illinois
3. County ....Williamson
4. Latitude... 37° 37’ 11’’ North
5. Longitude ....88° 57’ 11’’ West
6. Lake used for operations...Lake of Egypt
7. Year Constructed.. 1962
8. Modifications ....Placement of fill on downstream side of impoundments
9. Current Hazard Classification ....Low
10. Size – Small Impoundment[2]

B. IMPOUNDMENTS

POND 1 (BOTTOM ASH IMPOUNDMENT)

1. Type... Cross valley, small[2]

Note: SIPCO disagrees with the impoundment classification and maintains that this unit is incised.

2. Crest Elevation..±509.5[1]
3. Crest Length .... Approx. 1,300 ft perimeter
4. Crest Width ....12 ft
5. Impoundment Height..Approximately 13 ft
6. Upstream Slope.. 2.5H:1V
7. Downstream Slope .... Approximately 30H:1V
8. Volume of Stored Ash……………………………………….……..Unknown, ~9 acre feet capacity

POND 2 (BOTTOM ASH IMPOUNDMENT)

1. Type... Cross valley, small[2]

Note: SIPCO disagrees with the impoundment classification and maintains that this unit is incised.

2. Crest Elevation..±509.5[1]
3. Crest Length .... Approx. 1,300 ft perimeter
4. Crest Width ....12 ft
5. Impoundment Height..Approximately 21 ft
6. Upstream Slope.. 2.5H:1V

7. Downstream Slope .... Approximately 30H:1V
8. Volume of Stored Ash.......... Unknown, ~15 acre feet capacity

POND 4 (BOTTOM ASH IMPOUNDMENT)

1. Type.......... Cross valley, small[2]

Note: SIPCO disagrees with the impoundment classification and maintains that this unit is incised.

2. Crest Elevation.......... ±509.5[1]
3. Crest Length .... Approx. 1,900 ft perimeter
4. Crest Width .... Unknown
5. Impoundment Height.......... Approximately 25 ft
6. Upstream Slope.......... Unknown
7. Downstream Slope .... Approximately 18H:1V
8. Volume of Stored Ash.......... Unknown, ~55 acre feet capacity

C. DRAINAGE BASIN

1. Area of Drainage Basin .... Minimal/Unknown
2. Downstream Description: .... Discharges directly into Little Saline Creek

D. RESERVOIR INLET

POND 1 (BOTTOM ASH IMPOUNDMENT)

1. Reservoir Inlet.......... Inlet sluice pipe from the generating station

POND 2 (BOTTOM ASH IMPOUNDMENT)

1. Reservoir Inlet.......... Inlet sluice pipe from the generating station

POND 4 (BOTTOM ASH IMPOUNDMENT)

1. Reservoir Inlet.......... Multiple inlet pipes from Ponds 1 and 2

E. RESERVOIR

POND 1 (BOTTOM ASH IMPOUNDMENT)

1. Reservoir Capacity .... Storage capacity is approximately 9 acre-feet

POND 2 (BOTTOM ASH IMPOUNDMENT)

1. Reservoir Capacity .... Storage capacity is approximately 15 acre-feet

POND 4 (BOTTOM ASH IMPOUNDMENT)

1. Reservoir Capacity .... Storage capacity is approximately 55 acre-feet

F. PRIMARY SPILLWAY

POND 1 (BOTTOM ASH IMPOUNDMENT)

1. Description .... N/A – No Spillway Present

POND 2 (BOTTOM ASH IMPOUNDMENT)

1. Description .... N/A – No Spillway Present

POND 4 (BOTTOM ASH IMPOUNDMENT)

1. Description .... N/A – No Spillway Present

G. OUTLET WORKS

POND 1 (BOTTOM ASH IMPOUNDMENT)

1. Description .... 2 Outlet pipes in the same location at different elevations
2. Location .... Western embankment near the northwest corner of the pond
3. Intake Structure .... None
    a. Intake Invert Elevation .... Unknown
4. Discharge Conduit .... Plastic
    a. Length .... ~50 ft
    b. Diameter .... 12 inches (upper), 18 inches (lower)
5. Outlet Structure .... None
    a. Outlet Invert Elevation .... Unknown
    b. Energy Dissipation .... Riprap placed at pipe outlet
6. Discharge Channel .... None
7. Discharge Capacity with Water Surface at Top of Impoundment .... Unknown

POND 2 (BOTTOM ASH IMPOUNDMENT)

1. Description .... Single Steel Outlet Pipe
2. Location .... Western embankment near the southwest corner of the Pond
3. Intake Structure .... None
    a. Intake Invert Elevation .... Unknown
4. Discharge Conduit .... Steel

   a. Length .... ~50 ft
   b. Diameter .... 12 inches

5. Outlet Structure .... None
   a. Outlet Invert Elevation .... Unknown
   b. Energy Dissipation .... Riprap placed at pipe outlet
6. Discharge Channel .... None
7. Discharge Capacity with Water Surface at Top of Impoundment .... Unknown

POND 4 (BOTTOM ASH IMPOUNDMENT)

1. Description .... Vertical Outlet Pipe[3]
2. Location .... Northwest corner of pond
3. Intake Structure .... None, vertical pipe without trash rack
   a. Intake Invert Elevation .... Unknown
4. Discharge Conduit .... Unknown, suspected steel[3]
   a. Length .... ~950 ft
   b. Diameter .... ~18 inches
5. Outlet Structure .... Sluice Gate at concrete outlet structure
   a. Outlet Invert Elevation .... Unknown
   b. Energy Dissipation .... Concrete slab with surrounding riprap
6. Discharge Channel .... ~10’ riprap lined channel that discharges into the Little Saline Creek
7. Discharge Capacity with Water Surface at Top of Impoundment .... Unknown

H. MANAGEMENT

1. Owner .... Southern Illinois Power Cooperative
2. Purpose .... Coal Fired Energy Generation

Notes:

1. All elevations in feet based on as built construction drawings by Burns and McDonnell
2. Size is based on Illinois Department of Natural Resources Administrative Code for Impoundment Safety
3. Structure was inundated during the time of assessment and was not able to be assessed

3.3 Regional Geology and Seismicity

The plant site is situated in the Central Mississippi River Valley. As such, the subsurface conditions are expected to include Quaternary alluvial, colluvial, and eolian deposits overlying sedimentary bedrock, including coal deposits.

Based on our review of historical soil borings and information from the Web Soil Survey, it appears that the upper alluvial, colluvial, and eolian deposits at the site include combinations of silty clay, clayey silt, silty sand and clayey sand. Based on our review of data published by the United States Geological Survey (USGS), the sedimentary rock formations in Williamson County include shale, sandstone and limestone.

The plant site is situated between the New Madrid and Wabash Valley seismic zones, and both zones have a documented history of seismic activity. Based on the plant location between two seismic zones, the risk of seismic activity appears to be unusually high.

3.4 Hydrology and Hydraulics

It is our understanding that the bottom ash ponds are the only ponds that retain any significant amount of coal-ash residue. Hydrologic and hydraulic studies were not provided for any of the impoundments, including an overtopping analysis. Although it appears that any overflow would primarily be contained on the SIPCO property, a hydrologic and hydraulic analysis, including an overtopping analysis, should be completed.

3.5 Geotechnical Considerations

It is our understanding that the bottom ash ponds (Ponds 1 and 2) are the only ponds that retain any significant amount of coal-ash residue. Engineering studies regarding structural/embankment stability of the bottom ash pond embankments were not provided by SIPCO. Since the bottom ash pond embankments have been filled against, the effect on embankment stability is similar to a permanent stability berm. As a result, the factor of safety against embankment failure is expected to be very high based on engineering judgment. In addition, seepage is not a significant consideration since the embankments were designed with a compacted clay core and substantial fill has been placed on the north side of the embankments which provides protection against erosion/degradation of the embankments and clay core. Based on our discussions with SIPCO, we believe that the impoundments were not built over wet ash, slag or other unsuitable materials.

3.6 Structural Considerations

Structural elements involved with the operation of the ponds include pipe supports for steel intake pipes for Ponds 1 and 2 as well as the outlet structure located near the Little Saline Creek outfall. Ponds 1 and 2 inlet pipes appear to be supported on metal stands that appeared to be weathered, although not to the point of structural failure. The 8 foot by 4 foot concrete and steel structure near the Little Saline Creek outfall appears to be in fair condition. A sluice gate within the structure controls flow out of Pond 4, but was inundated at the time of assessment and could not be observed. Erosion under the catwalk foundation used to access the structure is noticeable, but does not appear to pose an immediate risk to the structure.

3.7 Performance Evaluations

There have been no previous federal or state assessments of the Marion Power Generating Station's Bottom Ash impoundments. Based on observations by Southern Illinois Power Cooperative in their daily visual assessments, and other documents and accounts, there have been no major incidents involving any of the assessed impoundments. Currently

Southern Illinois Power Cooperative's local plant personnel perform daily informal assessments of the impoundments and their associated structures while observing plant observations.

3.8 Hazard Classification

Ponds 1, 2 and 4 are currently classified as Class III (Low Hazard) dams by the Illinois Department of Natural Resources.

Due to the potential environmental and economic impacts that a failure at any of these impoundments would present, it is recommended that a hazard classification of "low" be assigned to all of the assessed impoundments. A "Significant Hazard" or "High Hazard" rating was not assigned to the impoundments, as it is not expected that a loss of life situation would be likely in the event of a failure, as the ponds sit immediately adjacent to Little Saline Creek without any homes, recreational facilities, businesses, roads or other structures immediately downstream of the impoundments. Figure 1 displays critical infrastructure downstream of the impoundments in relation to the Marion Power Generating Station.

3.9 Site Access

Prior to the Marion Generating Station assessment, permission from the Southern Illinois Power Cooperative to inspect the facility was requested and granted. After arriving at the site, passing through a security checkpoint and meeting with representatives of the Southern Illinois Power Cooperative, we were escorted by facility personnel to assess the impoundments. The impoundments can be accessed by standard car during normal weather conditions via gravel-surfaced roadways on the Marion Power Generating Station property.

SECTION 4 – SITE OBSERVATIONS

The impoundment upstream slopes crest and outlet works of Ponds 1, 2, and 4 were observed during the May 25, 2011 site assessment. General observations of these features are presented below; more specific observations of the site and facilities are documented in the Site assessment Evaluation Checklist provided in Appendix A.

4.1 Pond 1 (Bottom Ash Impoundment)

4.1.1 Upstream Slope

Overall, the upstream slope of the impoundment was in fair condition. Photos 11, 12, 14 and 15 in Appendix B show the conditions of the upstream slope. Figure 4 displays the location of where these photographs were taken during the assessment. Specific observations include:

- The upstream slope was laid back at approximately 2H:1V to 2.5H:1V based on visual observations. These observations are consistent with the design drawings that were provided by Southern Illinois Power Cooperative.
- Bottom ash cleanout operations had created bottom ash stockpiles against the upstream slope of the pond in some locations. However, these cleanout operations did not appear to have disturbed the original slopes of the impoundment.
- Vegetated riprap was present in various locations, but did not appear around the entire perimeter of the pond.
- Minor erosion rills, less than 6 inches deep, were noted on some of the upstream slopes.
- Grasses, woody bushes and reeds were observed on the upstream slope for the majority of the impoundment.

4.1.2 Crest

Overall, the crest of the impoundment was in satisfactory condition. Photos 12 and 15 show the condition of the crest. Specific observations include:

- Sparse grasses and bushes were observed on the crest.
- Well established sod was properly maintained on the southern and western portions of the pond.
- No major depressions or rutting was noted on the impoundment crest.

4.1.3 Outlet Works

The outlet works of Pond 1 consist of two pipe penetrations through the western portion of the pond that outlet into Pond 4. These pipes are located in the same location but at different elevations. The elevations of these pipes could not be confirmed as there was no recent survey information available at the time of assessment. In addition, the as built drawings did not reference a specific vertical datum, or show a second discharge pipe into Pond 4. These pipes are not controlled by valves or gates and do not utilize trash racks. Photo 16 shows the condition of the outlet pipes. Specific observations include:

- The intake location of the lower outlet pipe was not able to be observed as it was inundated at the time of assessment.
- No video monitoring of the pipe was available at the time of assessment.
- Overall, the outlet works system appears to be functioning as intended at this time.

4.1.4 Impoundment Inlet

Inflow into the Pond 1 is via metal piping on the southeastern corner of the impoundment, as well as storm water runoff that flows naturally into the pond. The inlet pipe can be seen in photo 14 of Appendix B. The inlet pipe appears to be in satisfactory condition.

4.2 Pond 2 (Bottom Ash Impoundment)

4.2.1 Upstream Slope

Overall, the upstream slope of the impoundment was in fair condition. Photos 7-10 in Appendix B show the condition of the upstream slope. Specific observations include:

- The upstream slope was laid back at approximately 2H:1V to 2.5H:1V based on visual observations. These observations are consistent with the design drawings that were provided by Southern Illinois Power Cooperative.
- Bottom ash cleanout operations had created bottom ash stockpiles against the upstream slope of the pond in some locations. However, these cleanout operations did not appear to have disturbed the original slopes of the impoundment.
- Vegetated riprap was present in various locations, but did not appear around the entire perimeter of the pond.
- Minor erosion rills, less than 6 inches deep, were noted on some of the upstream slopes.
- Grasses, woody bushes and reeds were observed on the upstream slope for the majority of the impoundment.

4.2.2 Crest

Overall, the crest of the impoundment was in satisfactory condition. Photos 7 and 8 show the condition of the crest. Specific observations include:

- The impoundment crest is an access road.
- Sparse grasses and bushes were observed on the crest.
- No major depressions or rutting was noted on the impoundment crest.

4.2.3 Outlet Works

The outlet works of Pond 2 consist of a single pipe penetration through the western portion of the pond that outlets into Pond 4. This pipe is located near the southwestern corner of the pond. The elevation of this pipe could not be confirmed as there was no recent survey information available at the time of assessment. In addition, the as built drawings did not reference a specific vertical datum. This pipe is not controlled and does not utilize a trash rack. Photo 13 shows the condition of the outlet pipe. Specific observations include:

- During the assessment, the outlet pipe was well above the water surface elevation of the pond and therefore was not flowing.
- No video monitoring of the steel pipe was available at the time of assessment.
- Overall, the outlet pipe appears that it would function as intended if the water surface of the impoundment was at or above its intake elevation.

4.2.4 Impoundment Inlet

Inflow into the Pond 2 is via metal piping on the southeastern corner of the impoundment, as well as storm water runoff that flows naturally into the pond. The inlet pipe can be seen in photos 9 and 10 of Appendix B. The inlet pipe appears to be in satisfactory condition.

4.3 Pond 4 (Bottom Ash Impoundment)

4.3.1 Upstream Slope

Overall, the upstream slope of the impoundment was in satisfactory condition. Photos 21 and 22 in Appendix B show the conditions of the upstream slope. Specific observations include:

- The upstream slope was laid back at approximately 2.5H:1V.
- Mowing had not been completed on the majority of the upstream slope.
- Grasses, bushes and woody debris were observed on the slope.

4.3.2 Crest

Overall, the crest of the impoundment was in satisfactory condition. Photos 17, 18 and 22 show the condition of the crest. Specific observations include:

- The impoundment crest is an access road.
- Well established grasses were observed on the crest.
- No major depressions or rutting was noted on the impoundment crest.
- Mowing operations had taken place around the majority of the crest.

4.3.3 Outlet Works

The outlet works consist of a vertical intake pipe that is located near the northwestern corner of the impoundment, approximately 25 feet toward the center of the pond. At the time of assessment, the intake pipe was inundated, and its size and type could not be confirmed. Photos 22 and 23 show the condition of the outlet pipe. Specific observations include:

- The discharge location of the outlet pipe was not able to be observed as it was inundated at the time of assessment.
- No video monitoring of the pipe was available at the time of assessment.
- Overall, the outlet works system appeared to be functioning as intended at the time of assessment.

4.3.4 Impoundment Inlet

Inflow into Pond 4 is via multiple inlet pipes on the east side of the pond from Ponds 1 and 2, as well as inlet pipes on the west side of the pond from Pond S-6. In addition, storm water runoff flows naturally into the pond from a relatively small drainage basin. Pipes that inlet into Pond 4 are surrounded by riprap to prevent erosion from their discharge. The inlet pipes appeared to be in functional condition. Photos 20 and 21 show the condition of the inlet pipes.

4.4 Other

The outlet structure at the outfall location is comprised of concrete and steel in addition to a sluice gate used to control flow. This structure then discharges water into a riprap lined channel that outlets into the Little Saline Creek. The concrete that is part of this structure is free from major spalling or cracking, and the steel portions of the structure are weathered but in fair condition. Material has eroded from under the concrete access path for this structure, but it appears that access to the structure has not been affected by the erosion. Overall, the structure appeared to be functioning as intended. Photos 24 through 28 show the condition of the structure and its associated components.

It was inquired if any monitoring equipment or assessment records were available for review in relation to the bottom ash impoundments. We understand that monitoring equipment is not in place for the impoundments except for water quality testing purposes. Assessment records related to impoundment safety do not exist for the impoundments.

It was inquired if Southern Illinois Power Cooperative had developed an Emergency Action Plan (EAP) related to a potential failure of the impoundments. We understand that an EAP has not been developed for the site.

It was also inquired if Southern Illinois Power Cooperative had developed an Operation and Maintenance (O&M) Manual for the Marion Power Generating Station impoundments. We understand that an O&M Manual has also not been developed for the site.

Photo 1 – Ponds 3A and 3B General Conditions Photograph

May 25, 2011 IL50160

Photo 2 – Pond S-1 General Conditions Photograph

May 25, 2011 IL50160

Photo 3 – Pond S-1 General Conditions Photograph

May 25, 2011 IL50160

Photo 4 – Pond S-2 General Conditions Photograph

May 25, 2011 IL50160

Photo 5 – Pond S-2 General Conditions Photograph

May 25, 2011 IL50160

Photo 6 – Pond S-3 General Conditions Photograph

May 25, 2011 IL50160

Photo 7 – Ash Pond 2 General Conditions Photograph

May 25, 2011 IL50160

Photo 8 – Ash Pond 2 General Conditions Photograph

May 25, 2011 IL50160

Photo 9 – Ash Pond 2 Inlet Sluice Pipe

May 25, 2011 IL50160

Photo 10 – Ash Pond 2 Inlet Sluice Pipe

May 25, 2011 IL50160

Photo 11 – Ash Pond 1 General Conditions Photograph

May 25, 2011 IL50160

Photo 12 – Ash Pond 1 General Conditions Photograph

May 25, 2011 IL50160

Photo 13 – Ash Pond 2 Discharge Pipe into Ash Pond 4

May 25, 2011 IL50160

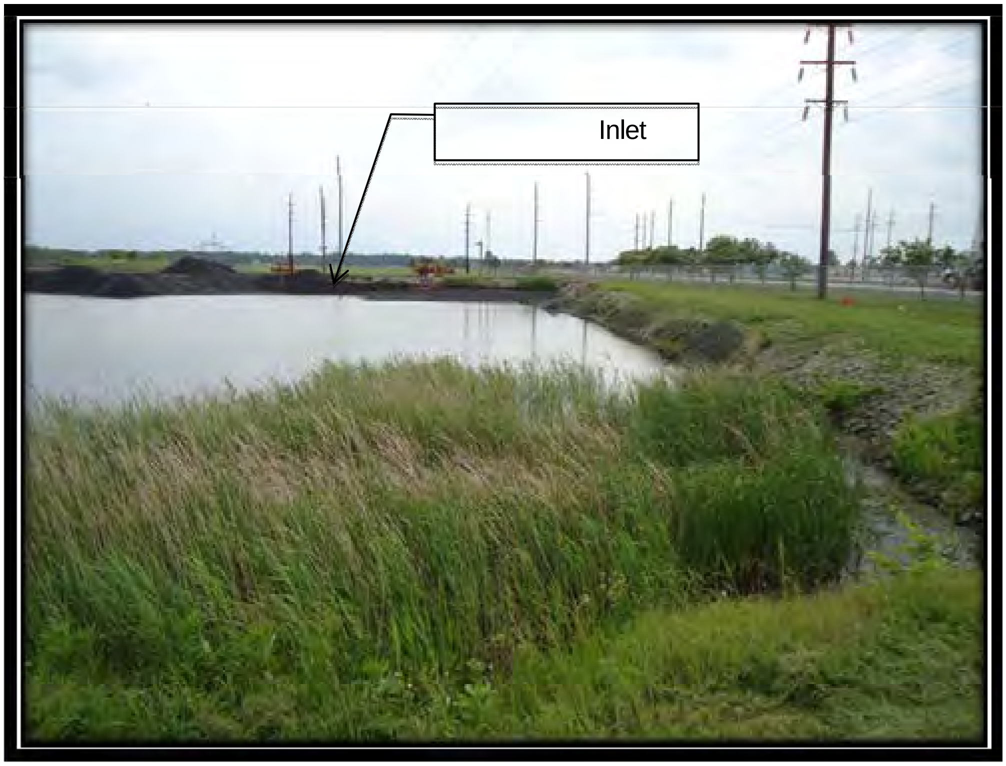

Photo 14 – Ash Pond 1 General Conditions Photograph (Note Inlet Sluice Pipe)

May 25, 2011 IL50160

Photo 15 – Ash Pond 1 General Conditions Photograph

May 25, 2011 IL50160

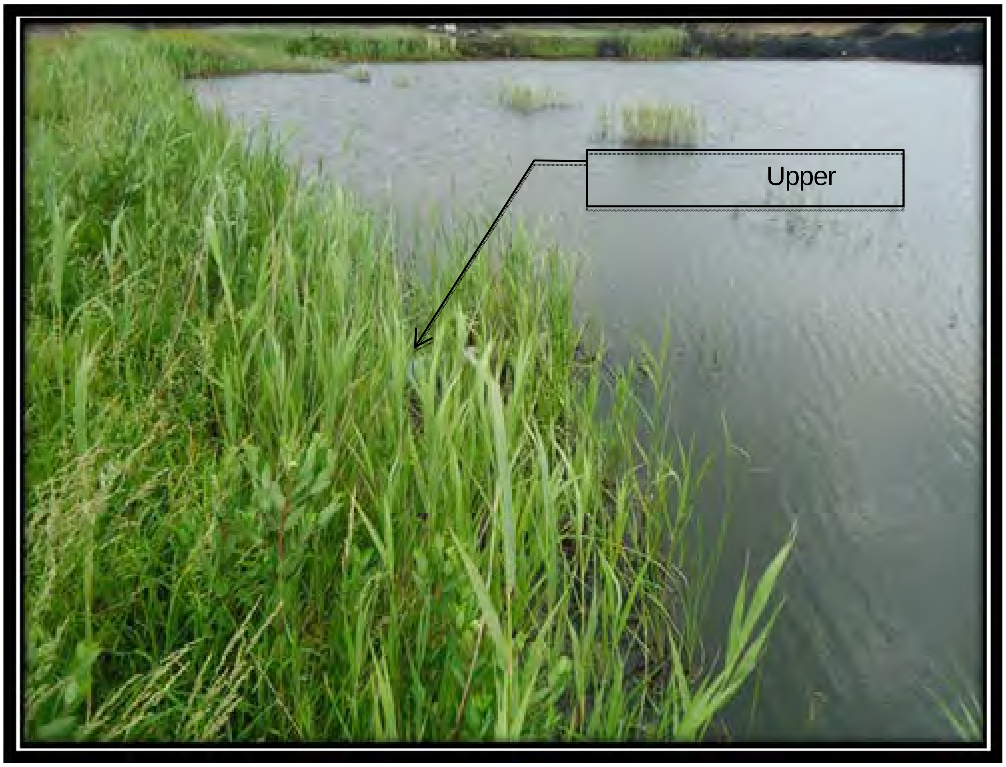

Photo 16 – Ash Pond 1 Upper Discharge Pipe into Pond 4

May 25, 2011 IL50160

Photo 17 – Pond 4 General Conditions Photograph

May 25, 2011 IL50160

Photo 18 – Pond 4 General Conditions Photograph

May 25, 2011 IL50160

Photo 19 – Pond 4 General Conditions Photograph

May 25, 2011 IL50160

Photo 20 – Discharge Pipe from Ash Pond 1 into Pond 4

May 25, 2011 IL50160

Photo 21 – Discharge Pipe from Ash Pond 2 into Pond 4

May 25, 2011 IL50160

Photo 22 – Intake from Pond 4 to Outlet Structure

May 25, 2011 IL50160

Photo 23 – Intake from Pond 4 to Outlet Structure (note submerged pipe)

May 25, 2011 IL50160

Photo 24 – Outlet Structure from Ash Pond 4

May 25, 2011 IL50160

Photo 25 – Outlet Structure from Ash Pond 4

May 25, 2011 IL50160

Photo 26 – Outlet Structure from Ash Pond 4

May 25, 2011 IL50160

Photo 27 – Corrugated Metal Pipe under Access Road Leading to Outfall Downstream of Pond 4

May 25, 2011 IL50160

Photo 28 – Corrugated Metal Pipe Outfall from Ash Ponds to the South Fork of Little Saline Creek

May 25, 2011 IL50160

SECTION 5 – OVERALL CONDITION OF THE FACILITY IMPOUNDMENTS

5.1 Analysis and Conclusions

Our analysis is summarized in four general considerations that are presented as follows:

Safety of the Impoundments including Maintenance and Methods of Operation

We understand that the impoundments have a history of safe performance. The future performance of these impoundments will likely be acceptable provided that the substantial amount of fill that was previously placed on the downstream (north) side of the impoundments is allowed to remain in place to continue acting as a stability berm.

Changes in Design or Operation of the Impoundments following Initial Construction

Much of the site on the downstream (north) side of the impoundments has been filled (presumably with coal combustion wastes and/or soil.

Structural Stability of the Impoundments

The structural stability of the impoundments was not formally evaluated. Since much of the site on the downstream (north) side of the impoundments has been filled (presumably with coal combustion wastes and/or soil), structural stability of the impoundments appears to be adequate based on engineering judgment. However, as no geotechnical computations were made available for review, the stability of the embankment(s) could not be independently verified.

Adequacy of Program for Monitoring Performance of the Impoundments

The present monitoring program primarily involves daily visual assessments by plant personnel on an informal basis. These visual assessments seem to be adequate to address issues such as surface erosion and general condition of the impoundments.

5.2 Summary Statement

I acknowledge that the management unit(s) referenced herein:

- Pond 1 (Bottom Ash Impoundment)
- Pond 2 (Bottom Ash Impoundment)
- Pond 4 (Bottom Ash Impoundment)

were personally assessed by me and found to be in the following condition:

POOR

These impoundments were assessed a POOR rating due to the lack of a stability analysis.

Signature: ____________________ Date: 2/28/13

Steven A. Wendland, P.E.
Geotechnical Engineer

PROFESSIONAL ENGINEER
STEVEN ALLAN
WENDLAND
062.065131
STATE OF ILLINOIS

SECTION 6 – RECOMMENDATIONS

Based on observations during the site assessment, it is recommended that the following action be taken at the Marion Power Generating Station.

6.1 Priority 1 Recommendations

1. **Perform repairs to the eroded soil and riprap under the catwalk foundation at the Little Saline Creek outfall by 8/31/2013 (see Photo 24).**
2. **Perform a stability analysis of the impoundment embankments by 08/31/2013, including static and seismic loading conditions, use of representative soil characteristics obtained by soil sampling, and a liquefaction potential analysis if a qualitative analysis of representative soil sampling warrants such potential analysis.**
3. **Complete a hydrologic and hydraulic analysis for the site, including an overtopping analysis, by 08/31/2013.**

6.2 Priority 2 Recommendations

1. **Develop an Operation and Maintenance (O&M) manual for the impoundments by 8/31/2013.** The O&M Manual should include procedures needed for operation and maintenance of the impoundments during typical operating conditions.

6.3 Definitions

Priority 1 Recommendations: Priority 1 Recommendations involve the correction of severe deficiencies where action is required to ensure the structural safety, operational integrity of a facility, and that may threaten the safety of the impoundment.

Priority 2 Recommendations: Priority 2 Recommendations where action is needed or required to prevent or reduce further impoundment damage or impair operation and/or improve or enhance the O&M of the facility, that do not appear to threaten the safety of the impoundment.

SECTION 7 – GLOSSARY OF TERMS

For the EPA Ash Pond Assessment program, the following glossary of terms shall be used for classification unless otherwise noted.

Hazard Potential Rating

"Hazard potential" means the possible adverse incremental consequences that result from the release of water or stored contents due to the failure of the impoundment or reservoir or the misoperation of the impoundment, reservoir, or appurtenances. The hazard potential classification of a impoundment or reservoir shall not reflect in any way on the current condition of the impoundment or reservoir and its appurtenant works, including the impoundment's or reservoir's safety, structural integrity, or flood routing capacity. These classifications are as described below:

1. **Less than Low Hazard Potential**

   "Less than Low Hazard" means failure or misoperation of the dam results in no probable loss of human life or economic or environmental losses.

2. **Low Hazard Potential**

   "Low hazard" means a impoundment's or reservoir's failure will result in no probable loss of human life and low economic loss or environmental loss, or both. Economic losses are principally limited to the owner's property.

3. **Significant Hazard Potential**

   "Significant hazard" means a impoundment's or reservoir's failure will result in no probable loss of human life but can cause major economic loss, environmental impoundmentage, disruption of lifeline facilities, or impact other concerns. Significant hazard potential classification impoundments or reservoirs are often located in predominantly rural or agricultural areas but could be located in areas with population and significant infrastructure.

4. High Hazard Potential

"High hazard" means a impoundment's or reservoir's failure will result in probable loss of human life.

Size Classification

In accordance with the Illinois Department of Natural Resources (IDNR) Administrative Code for Impoundment Safety, "Part 3702 - Construction and Maintenance of Impoundments" dated January 13, 1987, a impoundment system is classified by size based on its height and potential storage capacity. Size classification is determined by which category (storage or height) is greatest (produces the larger size classification).

Category	Storage (acre-feet)	Height (feet)
Small	<1,000	<40
Intermediate	≥ 1,000 to <50,000	≥ 40 to <100
Large	≥ 50,000	≥ 100

Overall Classification of Impoundment

In a system similar to the New Jersey Department of Environmental Protection Impoundment Safety Guidelines for the Assessment of Existing Impoundments (January 2008), when the following terms are capitalized they denote and shall be used to describe the overall classification of the impoundment as follows:

SATISFACTORY - No existing or potential management unit safety deficiencies are recognized. Acceptable performance is expected under all applicable loading conditions (static, hydrologic, seismic) in accordance with the applicable criteria. Minor maintenance items may be required.

FAIR – Acceptable performance is expected* under all required loading conditions (static, hydrologic, seismic) in accordance with the applicable safety regulatory criteria. Minor deficiencies may exist that require remedial action and/or secondary studies or investigations.

POOR - A management unit safety deficiency is recognized for any required loading condition (static, hydrologic, seismic) in accordance with the applicable dam safety regulatory criteria. Remedial action is necessary. POOR also applies when further critical studies or investigations are needed to identify any potential dam safety deficiencies.

UNSATISFACTORY – Considered unsafe. A dam safety deficiency is recognized that requires immediate or emergency remedial action for problem resolution. Reservoir restrictions may be necessary.

*the term expected is to be defined as likely

Recommendation Listing

Recommendations shall be written concisely and identify the specific actions to be taken. The first word in the recommendation should be an action word (i.e. “Prepare”, “Perform”, or ”Submit”). The recommendations shall be prioritized and numbered to provide easy reference. Impoundment Safety recommendations shall be grouped, listed or categorized similar to the U.S. Department of Interior, Reclamation Manual - Directives and Standards - Review/Examination Program for High- and Significant-Hazard Impoundments (July, 1998 FAC 01-07) as follows:

Priority 1 Recommendations: Priority 1 Recommendations involve the correction of severe deficiencies where action is required to ensure the structural safety, operational integrity of a facility, and that may threaten the safety of the impoundment.

Priority 2 Recommendations: Priority 2 Recommendations where action is needed or required to prevent or reduce further impoundment damage or impair operation and/or improve or enhance the O&M of the facility, that do not appear to threaten the safety of the impoundment.

SECTION 8 – REFERENCES

- Burns and McDonnell Engineering Company, Ponds 1 & 2 Bottom Ash Plan & Elevation, March 22, 1962
- Illinois Department of Natural Resources (IDNR), Administrative Code for Impoundment Safety, “Part 3702 – Construction and Maintenance of Impoundments”, January 13, 1987
- New Jersey Department of Environmental Protection, Impoundment Safety Guidelines for the Assessment of Existing Impoundments, January 2008
- Southern Illinois Power Cooperative, North Pond Disposal Area Site Plan Underground Utilities Drawing, March 17, 2003
- US Department of Agriculture (USDA)/ Natural Resources Conservation Service (NRCS) Web Soil Survey - online
- US Department of the Interior, Reclamation Manual – Directives and Standards – Review/Examination Program for High and Significant Hazard Impoundments, July 1998
- US Department of the Interior, Safety and Evaluation of Existing Impoundments (SEED), 1995

SECTION 9 – LIMITATIONS

The scope of this work is for a preliminary screening for the EPA and plant owner/operator of the visible performance and apparent stability of the impoundment embankments based only on the observable surface features and information provided by the owner/operator. Other features below the ground surface may exist or may be obscured by vegetation, water, debris, or other features that could not be identified and reported. This site assessment and report were performed without the benefit of any soil drilling, sampling, or testing of the subsurface materials, calculations of capacities, quantities, or stability, or any other engineering analyses. The purpose of this assessment is to provide information to the EPA and the plant owner/operator about recommended actions and/or studies that need to be performed to document the stability and safety of the impoundments.

This work was performed by qualified personnel in a manner consistent with that level of care and skill ordinarily exercised by other members of Kleinfelder's profession, practicing in the same locality, under similar conditions, and at the date the services are provided. Kleinfelder's conclusions, opinions, and recommendations are based on a limited number of observations. It is possible that conditions could vary between or beyond the observations made. Kleinfelder makes no other representation, guarantee, or warranty, express or implied, regarding the services, communication (oral or written), report, opinion, or instrument of service provided. Kleinfelder makes no warranty or guaranty of future embankment stability or safety.

This report may be used only by the client and the registered design professional in responsible charge and only for the purposes stated for this specific engagement within a reasonable time from its issuance but in no event later than one (1) year from the date of the report.

The information, included on graphic representations in this report, has been compiled from a variety of sources and is subject to change without notice. Kleinfelder makes no representations or warranties, expressed or implied, as to accuracy, completeness, timeliness, or rights to the use of such information. These documents are not intended for use as a land survey product nor are they designed or intended as a construction design document. The use or misuse of the information contained on these graphic representations is at the sole risk of the party using or misusing the information.

Recommendations contained in this report are based on preliminary field observations without the benefit of subsurface explorations, laboratory tests, or detailed knowledge of the existing construction. If the scope of the proposed recommendations changes from that described in this report, the conclusions and recommendations contained in this report are not considered valid unless the changes are reviewed and the conclusions of this report are modified or approved in writing by Kleinfelder. Kleinfelder cannot be responsible for interpretation by others of this report or the conditions encountered in the field.

AERIAL IMAGE

NTS

IMAGE SOURCE: GOOGLE EARTH PRO - IMAGE DATE 06/28/2009

KLEINFELDER
Bright People. Right Solutions.
www.kleinfelder.com

PROJECT NO.	118963
DATE:	06/24/2011
DRAWN BY:	MAG
CHECKED BY:	BDH
FILE NAME:	

MARION POWER STATION
VICINITY MAP

MARION POWER GENERATING STATION
11543 LAKE OF EGYPT ROAD
MARION, IL 62959

FIGURE

1

15 Jun 2011, 1:53pm, MGonzalez

S:\118963 EPA Ash Ponds Round 10\Marion\Figures

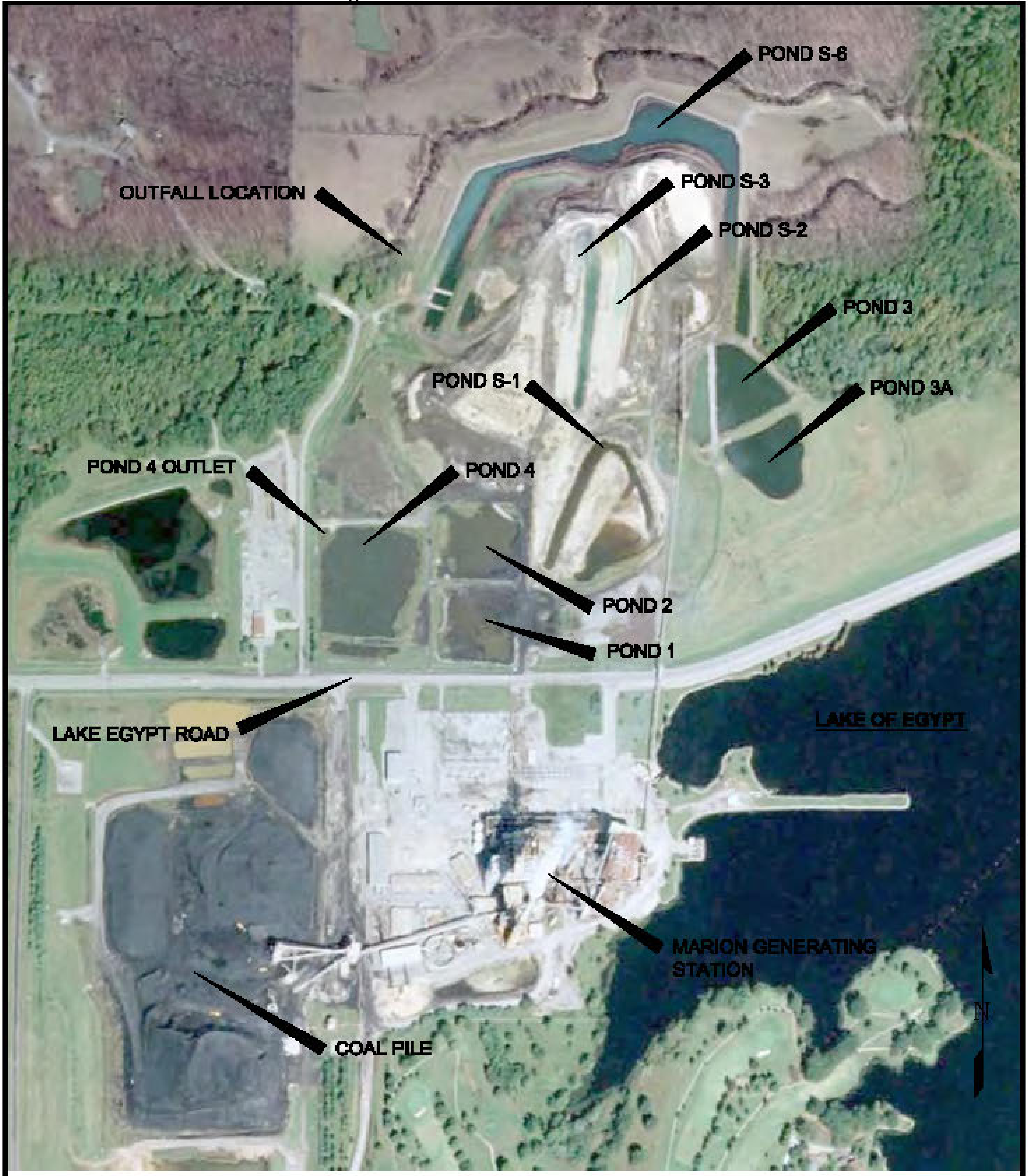

AERIAL IMAGE

NTS

IMAGE SOURCE: GOOGLE EARTH PRO - IMAGE DATE 06/29/2009

KLEINFELDER
Bright People. Right Solutions.
www.kleinfelder.com

PROJECT NO.	115958
DATE:	06/24/2011
DRAWN BY:	MAG
CHECKED BY:	BDH
FILE NAME:	

MARION POWER STATION
AERIAL LOCATION MAP

MARION POWER GENERATING STATION
11543 LAKE OF EGYPT ROAD
MARION, IL 62959

FIGURE
2

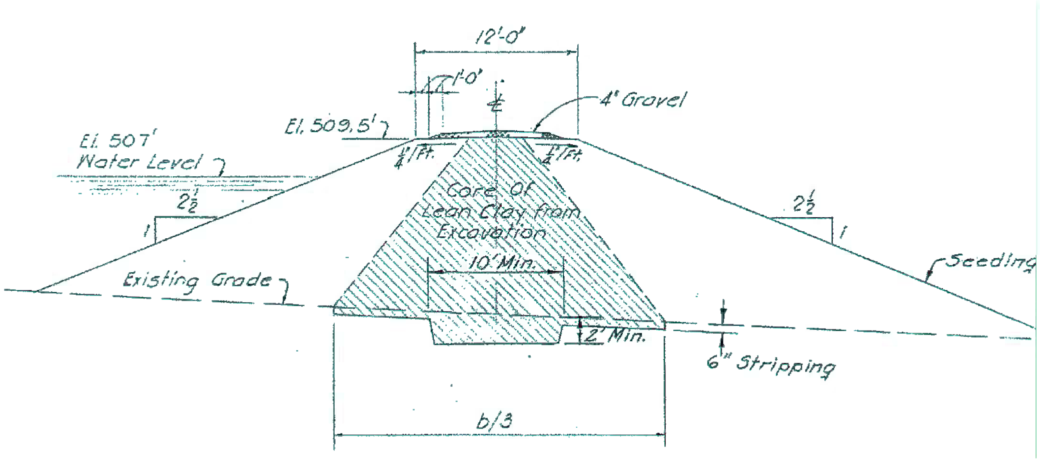

TYPICAL EMBANKMENT SECTION - EMBANKMENT SEPARATING ASH POND 1 AND 2

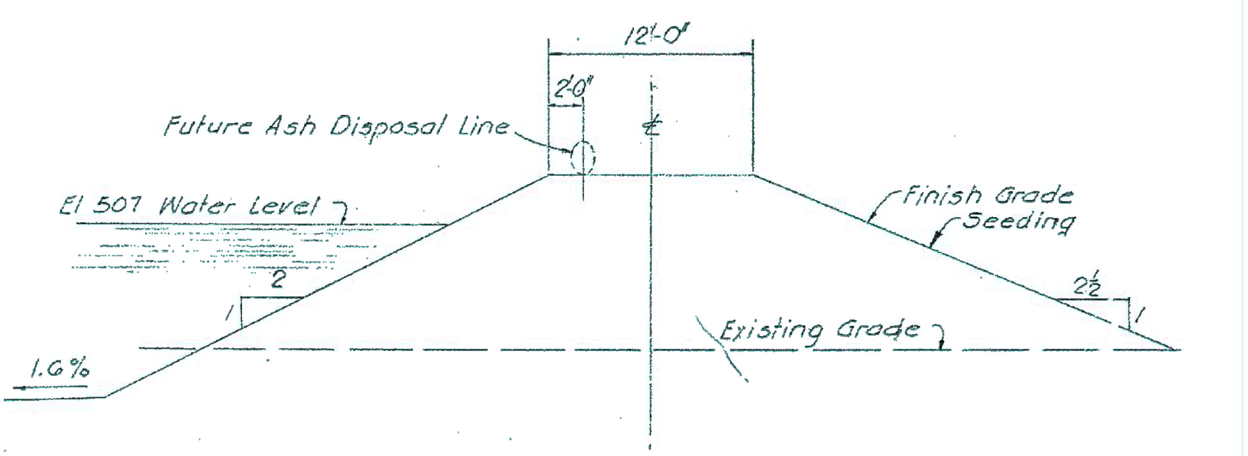

TYPICAL EMBANKMENT SECTION - OUTER EMBANKMENT ASH POND 1 AND 2

NTS

16 Jun 2011, 1:30pm, MGardella

S:\118953 EPA Ash Ponds Round 10\Marion\Figures\

IMAGE SOURCES:
BURNS AND McDONNELL ENGINEERING CO. - PONDS 1 & 2 BOTTOM ASH PLAN & ELEVATION- SHEET 30 - 07/05/62

KLEINFELDER
Bright People. Right Solutions.
www.kleinfelder.com

PROJECT NO.	118953
DATE:	06/24/2011
DRAWN BY:	MAG
CHECKED BY:	BDH
FILE NAME:	

TYPICAL CROSS SECTION
ASH PONDS

MARION POWER GENERATING STATION
11543 LAKE OF EGYPT ROAD
MARION, IL 62959

FIGURE
3

PHOTO PLAN OF INSPECTION POINTS - GENERAL FACILITY

MARION POWER GENERATING STATION
11543 LAKE OF EGYPT ROAD
MARION, IL 62959

FIGURE 4
1 of 1 sheets

SCALE: NTS

KLEINFELDER
Bright People. Right Solutions.

NO.	REVISION	BY	DATE
⚠	-	—	—
⚠	-	—	—
⚠	-	—	—
⚠	-	—	—
⚠	-	—	—

PLOTTED: 16 Jun 2011

APPENDIX A

Site Assessment Evaluation Checklists

Electronic Filing - Received, Clerk's Office : 07/17/2014

Coal Combustion Dam Inspection Checklist Form

US Environmental Protection Agency

Site Name: MARION GENERATING STATION

Date: 05/25/2011

Unit Name: ASH POND 1

Operator's Name: SOUTHERN ILLINOIS POWER COOP

Unit I.D.:

Hazard Potential Classification: High Significant [✓ Low]

Inspector's Name: BRIAN HAVENS AND MATT GARDELLA

Check the appropriate box below. Provide comments when appropriate. If not applicable or not available, record "N/A". Any unusual conditions or construction practices that should be noted in the comments section. For large diked embankments, separate checklists may be used for different embankment areas. If separate forms are used, identify approximate area that the form applies to in comments.

	Yes	No		Yes	No
1. Frequency of Company's Dam Inspections?	DAILY BUT UNDOCUMENTED		18. Sloughing or bulging on slopes?		X
2. Pool elevation (operator records)?	504.2'		19. Major erosion or slope deterioration?		X
3. Decant inlet elevation (operator records)?	505.5'		20. Decant Pipes		
4. Open channel spillway elevation (operator records)?	N/A		Is water entering inlet, but not exiting outlet?		X
5. Lowest dam crest elevation (operator records)?	~509.5'		Is water exiting outlet, but not entering inlet?		X
6. If instrumentation is present, are readings recorded (operator records)?	N/A	N/A	Is water exiting outlet flowing clear?	X	
7. Is the embankment currently under construction?		X	21. Seepage (specify location, if seepage carries fines, and approximate seepage rate below):		
8. Foundation preparation (remove vegetation, stumps, topsoil in area where embankment fill will be placed)?	X		From underdrain?		X
9. Trees growing on embankment? (If so, indicate largest diameter below)	X		At isolated points on embankment slopes?		X
10. Cracks or scarps on crest?		X	At natural hillside in the embankment area?		X
11. Is there significant settlement along the crest?		X	Over widespread areas?		X
12. Are decant trashracks clear and in place?	N/A	N/A	From downstream foundation area?		X
13. Depressions or sinkholes in tailings surface or whirlpool in the pool area?		X	"Boils" beneath stream or ponded water?		X
14. Clogged spillways, groin or diversion ditches?		X	Around the outside of the decant pipe?		X
15. Are spillway or ditch linings deteriorated?	N/A	N/A	22. Surface movements in valley bottom or on hillside?		X
16. Are outlets of decant or underdrains blocked?		X	23. Water against downstream toe?	N/A	N/A INCISED
17. Cracks or scarps on slopes?		X	24. Were Photos taken during the dam inspection?	X	

Major adverse changes in these items could cause instability and should be reported for further evaluation. Adverse conditions noted in these items should normally be described (extent, location, volume, etc.) in the space below and on the back of this sheet.

Inspection Issue #	Comments
2, 3, 5	POOL ELEVATION TAKEN FROM PLANT SURVEY DRAWINGS AND WAS NOT POSSIBLE TO MEASURE AT THE TIME OF INSPECTION.
9	SMALL TREES 1"-2" DIAMETER PRESENT ON INTERAL SLOPES

U. S. Environmental Protection Agency

Coal Combustion Waste (CCW)
Impoundment Inspection

Impoundment NPDES Permit # IL 0004316 INSPECTOR BRIAN HAVENS
MATT GARDECKA
Date 05/25/2011

Impoundment Name ASH POND 1
Impoundment Company SOUTHERN ILLINOIS POWER CO-OP
EPA Region 5
State Agency (Field Office) Addresss 2309 WEST MAIN STREET
MARION, IL 62959
Name of Impoundment ASH POND 1
(Report each impoundment on a separate form under the same Impoundment NPDES Permit number)

New x Update ______

	Yes	No
Is impoundment currently under construction?		x
Is water or ccw currently being pumped into the impoundment?	x	

IMPOUNDMENT FUNCTION: SETTLING POND FOR BOTTOM ASH

Nearest Downstream Town : Name CREAL SPRINGS, IL
Distance from the impoundment ~6 MILES
Impoundment
Location: Longitude 88 Degrees 57 Minutes 14 Seconds
Latitude 37 Degrees 37 Minutes 21 Seconds
State ILLINOIS County WILLIAMSON

Does a state agency regulate this impoundment? YES ______ NO x (DAM SAFETY NOT MONITORED, ONLY DISCHARGE)

If So Which State Agency? ILLINOIS ENVIRONMENTAL PROTECTION AGENCY

HAZARD POTENTIAL (In the event the impoundment should fail, the following would occur):

______ **LESS THAN LOW HAZARD POTENTIAL:** Failure or misoperation of the dam results in no probable loss of human life or economic or environmental losses.

__X__ **LOW HAZARD POTENTIAL:** Dams assigned the low hazard potential classification are those where failure or misoperation results in no probable loss of human life and low economic and/or environmental losses. Losses are principally limited to the owner's property.

______ **SIGNIFICANT HAZARD POTENTIAL:** Dams assigned the significant hazard potential classification are those dams where failure or misoperation results in no probable loss of human life but can cause economic loss, environmental damage, disruption of lifeline facilities, or can impact other concerns. Significant hazard potential classification dams are often located in predominantly rural or agricultural areas but could be located in areas with population and significant infrastructure.

______ **HIGH HAZARD POTENTIAL:** Dams assigned the high hazard potential classification are those where failure or misoperation will probably cause loss of human life.

DESCRIBE REASONING FOR HAZARD RATING CHOSEN:

POND IS ~~INCISED~~ Cross Valley AND FAILURE IS ~~NOT A LIKELY [illegible]~~ Possible. MISOPERATION COULD OVERFILL PONDS 1 + 2 WITH SLURRY, THIS WOULD LIKELY RESULT IN PONDS 1 + 2 OVERTOPPING INTO POND 4 WHICH WOULD THEN HAVE TO FILL AND OVERTOP BEFORE ENVIRONMENTAL OR ECONOMIC IMPACTS WOULD BE SEEN. THERE ARE NO FACILITIES LOCATED ADJACENT TO ~~THE~~ IMPOUNDMENTS THAT WOULD LIKELY POSE A LOSS OF LIFE CIRCUMSTANCE IN THE EVENT OF MISOPERATION/FAILURE. DAMAGE IN THE CASE OF MISOPERATION/FAILURE WOULD LIKELY BE CONTAINED TO JUST THE OWNERS PROPERTY. IT IS OUR UNDERSTANDING THAT THE IMPOUNDMENTS WERE NOT CONSTRUCTED OVER WET ASH, SLAG, OR OTHER UNSUITABLE MATERIALS SIMILAR TO THE KINGSTON TVA SITE.

CONFIGURATION:

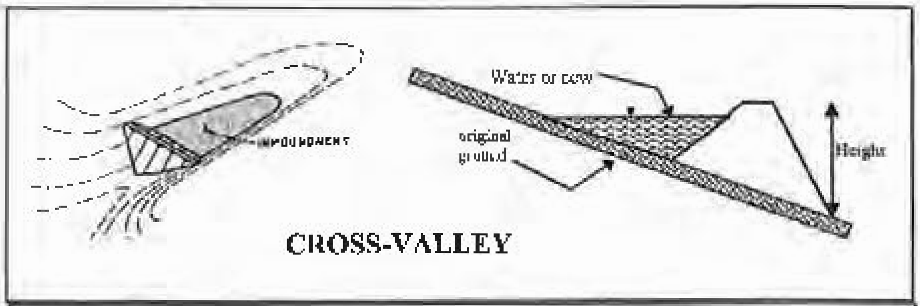

CROSS-VALLEY

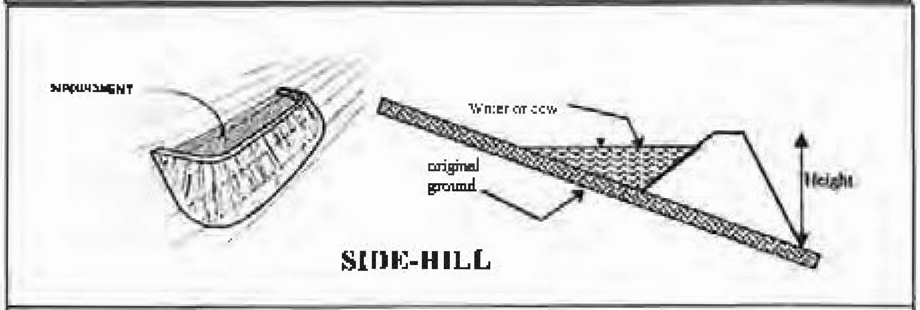

SIDE-HILL

DIKED

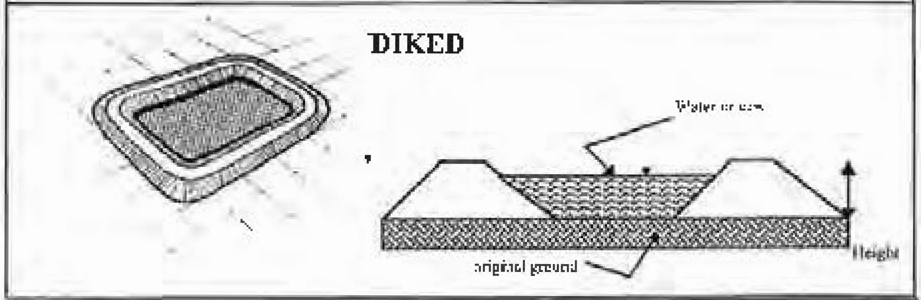

INCISED

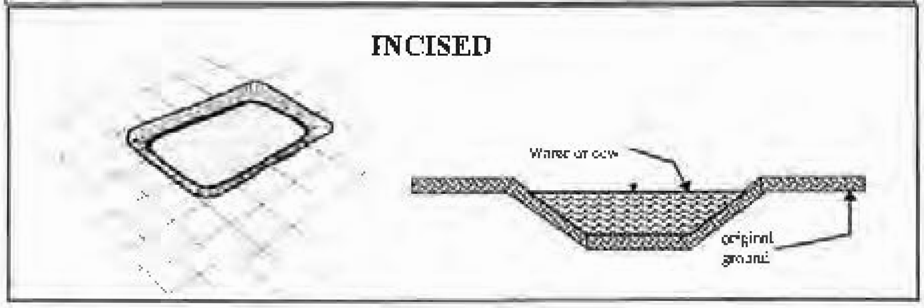

X Cross-Valley
___ Side-Hill
___ Diked
___ Incised (form completion optional)
___ Combination Incised/Diked

Embankment Height 13 feet Embankment Material Earth fill
Pool Area ~1.75 acres Liner unknown
Current Freeboard 5 feet Liner Permeability unknown

TYPE OF OUTLET (Mark all that apply)

N/A **Open Channel Spillway**
_____ Trapezoidal
_____ Triangular
_____ Rectangular
_____ Irregular

_____ depth
_____ bottom (or average) width
_____ top width

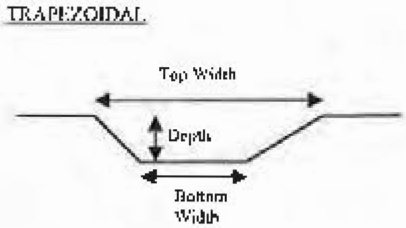

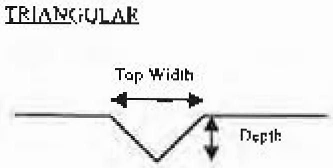

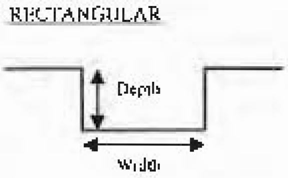

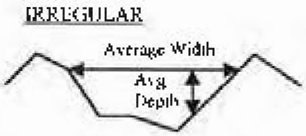

X **Outlet**

~18" inside diameter

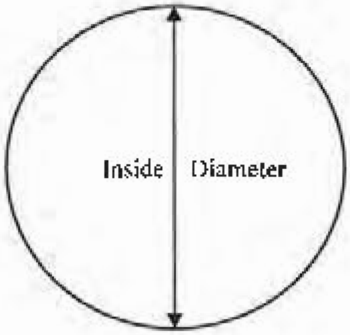

Material
_____ corrugated metal
_____ welded steel
_____ concrete
X plastic (hdpe, pvc, etc.)
_____ other (specify) _____________

Is water flowing through the outlet? YES x NO _____

N/A **No Outlet**

X **Other Type of Outlet** (specify) ~12" PLASTIC PIPE USED AS SECOND OUTLET ABOVE LOWER 18" PIPE

The Impoundment was Designed By BURNS + MCDONNELL ENGINEERING

Has there ever been a failure at this site? YES _________ NO ____x____

If So When? ____________________

If So Please Describe : ______________________________

Has there ever been significant seepages at this site? YES ________ NO __x__

If So When? ____________________

IF So Please Describe: ____________________

Has there ever been any measures undertaken to monitor/lower Phreatic water table levels based on past seepages or breaches at this site? YES ________ NO __x__

If so, which method (e.g., piezometers, gw pumping,...)? ____________________

If so Please Describe : ____________________

Coal Combustion Dam Inspection Checklist Form

US Environmental
Protection Agency

Site Name: MARION GENERATING STATION
Date: 05/25/2011
Unit Name: ASH POND 2
Operator's Name: SOUTHERN ILLINOIS POWER CO.OP
Unit I.D.:
Hazard Potential Classification: High Significant [✓ Low]
Inspector's Name: BRIAN HAVENS & MATT GARDELLA

Check the appropriate box below. Provide comments when appropriate. If not applicable or not available, record "N/A". Any unusual conditions or construction practices that should be noted in the comments section. For large diked embankments, separate checklists may be used for different embankment areas. If separate forms are used, identify approximate area that the form applies to in comments.

	Yes	No
1. Frequency of Company's Dam Inspections?	DAILY BUT UNDOCUMENTED	
2. Pool elevation (operator records)?	502.0'	
3. Decant inlet elevation (operator records)?	505.5	
4. Open channel spillway elevation (operator records)?	N/A	
5. Lowest dam crest elevation (operator records)?	509.5	
6. If instrumentation is present, are readings recorded (operator records)?	N/A	N/A
7. Is the embankment currently under construction?		x
8. Foundation preparation (remove vegetation,stumps, topsoil in area where embankment fill will be placed)?	x	
9. Trees growing on embankment? (If so, indicate largest diameter below)	x	
10. Cracks or scarps on crest?		x
11. Is there significant settlement along the crest?		x
12. Are decant trashracks clear and in place?	N/A	N/A
13. Depressions or sinkholes in tailings surface or whirlpool in the pool area?		x
14. Clogged spillways, groin or diversion ditches?		x
15. Are spillway or ditch linings deteriorated?	N/A	N/A
16. Are outlets of decant or underdrains blocked?		x
17. Cracks or scarps on slopes?		x

	Yes	No
18. Sloughing or bulging on slopes?		x
19. Major erosion or slope deterioration?		x
20. Decant Pipes:	■	■
Is water entering inlet, but not exiting outlet?		x
Is water exiting outlet, but not entering inlet?		x
Is water exiting outlet flowing clear?	x	
21. Seepage (specify location, if seepage carries fines, and approximate seepage rate below):	■	■
From underdrain?		x
At isolated points on embankment slopes?		x
At natural hillside in the embankment area?		x
Over widespread areas?		x
From downstream foundation area?		x
"Boils" beneath stream or ponded water?		x
Around the outside of the decant pipe?		x
22. Surface movements in valley bottom or on hillside?		x
23. Water against downstream toe?	N/A	N/A INCISED
24. Were Photos taken during the dam inspection?	x	

Major adverse changes in these items could cause instability and should be reported for further evaluation. Adverse conditions noted in these items should normally be described (extent, location, volume, etc.) in the space below and on the back of this sheet.

Inspection Issue #	Comments
2, 3, 5	POOL ELEV. TAKEN FROM PLANT SURVEY DRAWINGS AND WAS NOT POSSIBLE TO MEASURE AT THE TIME OF INSPECTION
9	SMALL TREES/BRUSH PRESENT 1"-2" DIAMETER ON INTERNAL SLOPES

U. S. Environmental Protection Agency

Coal Combustion Waste (CCW)
Impoundment Inspection

Impoundment NPDES Permit # IL 0004316 INSPECTOR BRIAN HANOOS
MATT GARDELLA

Date 05/25/2011

Impoundment Name ASH POND 2
Impoundment Company SOUTHERN ILLINOIS POWER CO-OP
EPA Region 5
State Agency (Field Office) Addresss 2309 WEST MAIN STREET
MARION, IL 62959
Name of Impoundment ASH POND 2
(Report each impoundment on a separate form under the same Impoundment NPDES Permit number)

New x Update ______

	Yes	No
Is impoundment currently under construction?		x
Is water or ccw currently being pumped into the impoundment?	x	

IMPOUNDMENT FUNCTION: SETTLING POND FOR BOTTOM ASH

Nearest Downstream Town : Name CREAL SPRINGS, IL
Distance from the impoundment ~6 MILES
Impoundment
Location: Longitude 88 Degrees 57 Minutes 14 Seconds
Latitude 37 Degrees 37 Minutes 24 Seconds
State ILLINOIS County WILLIAMSON

Does a state agency regulate this impoundment? YES ______ NO x (DAM SAFETY NOT MONITORED, ONLY DISCHARGE)

If So Which State Agency? ILLINOIS ENVIRONMENTAL PROTECTION AGENCY

HAZARD POTENTIAL (In the event the impoundment should fail, the following would occur):

______ **LESS THAN LOW HAZARD POTENTIAL:** Failure or misoperation of the dam results in no probable loss of human life or economic or environmental losses.

__X__ **LOW HAZARD POTENTIAL:** Dams assigned the low hazard potential classification are those where failure or misoperation results in no probable loss of human life and low economic and/or environmental losses. Losses are principally limited to the owner's property.

______ **SIGNIFICANT HAZARD POTENTIAL:** Dams assigned the significant hazard potential classification are those dams where failure or misoperation results in no probable loss of human life but can cause economic loss, environmental damage, disruption of lifeline facilities, or can impact other concerns. Significant hazard potential classification dams are often located in predominantly rural or agricultural areas but could be located in areas with population and significant infrastructure.

______ **HIGH HAZARD POTENTIAL:** Dams assigned the high hazard potential classification are those where failure or misoperation will probably cause loss of human life.

DESCRIBE REASONING FOR HAZARD RATING CHOSEN:

POND 1, ~~[illegible]~~ Cuss Valley SAND FAILURE IS ~~NOT A LIKELY PROBABILITY~~ Possible. MISOPERATION
COULD OVERFILL PONDS 1+2 WITH SLURRY. THIS WOULD LIKELY RESULT
IN PONDS 1+2 OVERTOPPING INTO POND 4 WHICH WOULD THEN HAVE
TO FILL AND OVERTOP BEFORE ENVIRONMENTAL OR ECONOMIC
IMPACTS WOULD BE SEEN. THERE ARE NO FACILITIES LOCATED
ADJACENT THE THE IMPOUNDMENTS THAT WOULD LIKELY HAVE
A LOSS OF LIFE CIRCUMSTANCE IN THE EVENT OF MISOPERATION/
FAILURE. DAMAGE IN THE CASE OF MISOPERATION/FAILURE
WOULD LIKELY BE CONTAINED TO THE OWNERS PROPERTY.
IT IS OUR UNDERSTANDING THAT THE IMPOUNDMENTS WERE NOT
CONSTRUCTED OVER WET ASH, SLAG OR OTHER UNSUITABLE
MATERIALS SIMILAR TO THE KINGSTON TVA SITE.

CONFIGURATION:

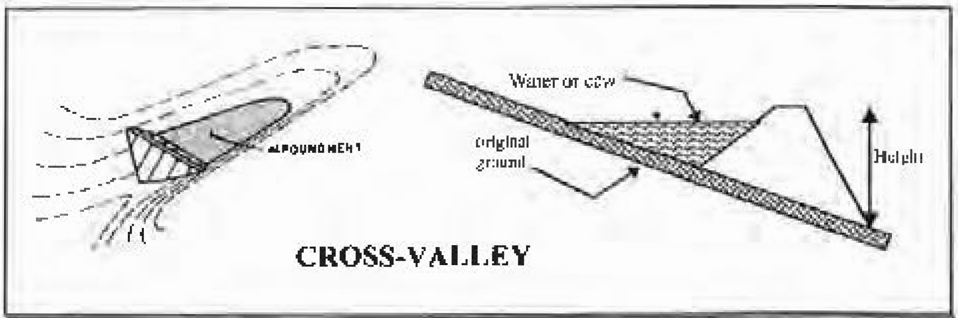

CROSS-VALLEY

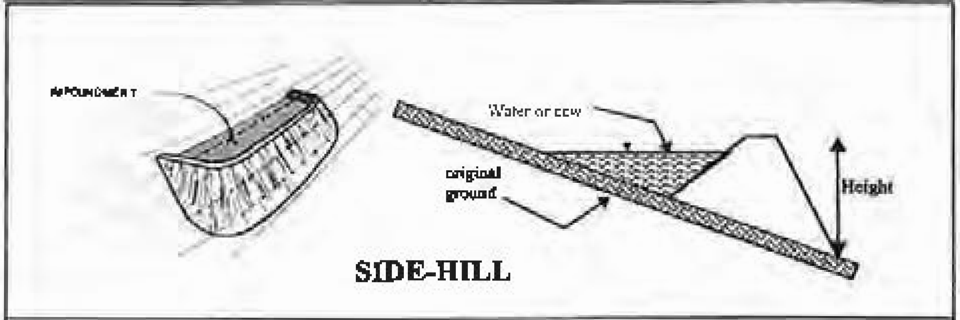

SIDE-HILL

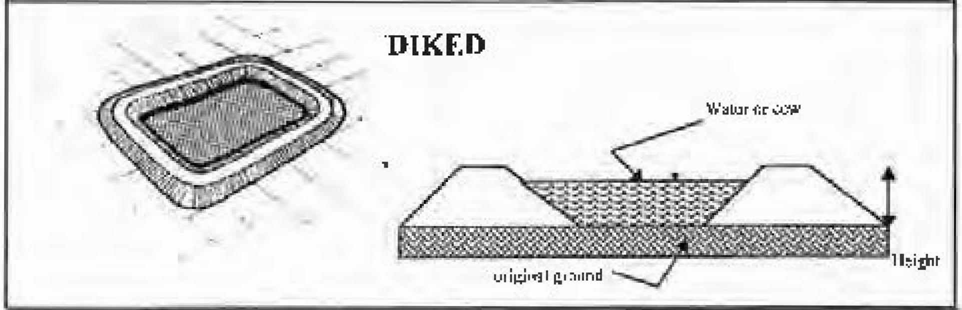
DIKED

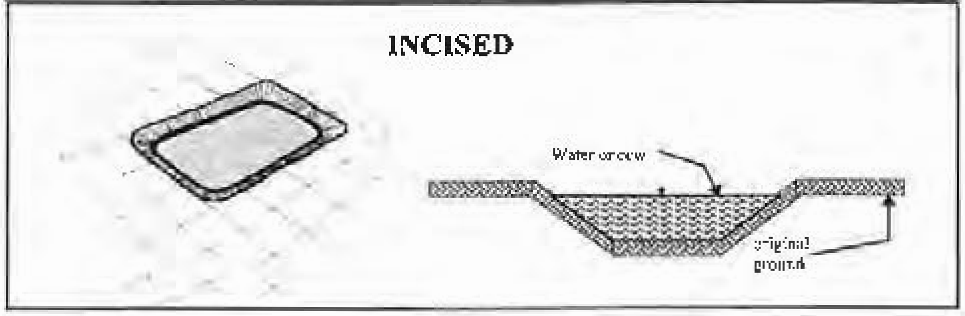
INCISED

X Cross-Valley
Side-Hill
Diked
~~x~~ Incised (form completion optional)
Combination Incised/Diked

Embankment Height ~~N/A~~ ~21 feet
Embankment Material Earthfill
Pool Area ~ 2 acres
Liner unknown
Current Freeboard 5 feet
Liner Permeability unknown

TYPE OF OUTLET (Mark all that apply)

N/A **Open Channel Spillway**
______ Trapezoidal
______ Triangular
______ Rectangular
______ Irregular

______ depth
______ bottom (or average) width
______ top width

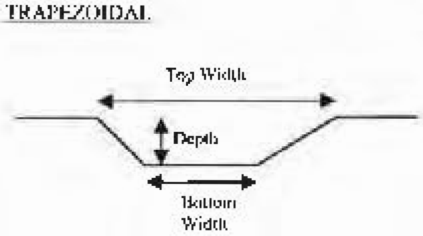

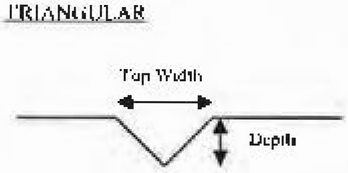

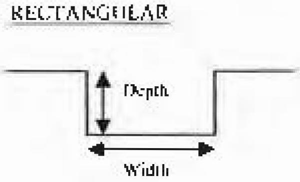

X **Outlet**

~12" inside diameter

Material
______ corrugated metal
X welded steel
______ concrete
______ plastic (hdpe, pvc, etc.)
______ other (specify) ______________________

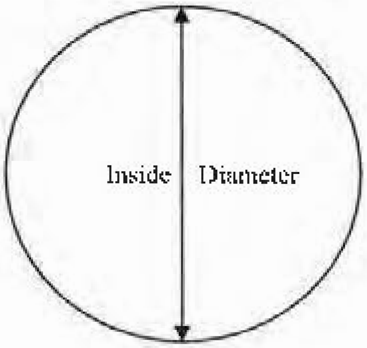

Is water flowing through the outlet? YES ______ NO X

N/A **No Outlet**

N/A **Other Type of Outlet** (specify) ______________________

The Impoundment was Designed By BURNS & MACDONNELL ENGINEERING

Has there ever been a failure at this site? YES __________ NO ____x____

If So When? ____________________

If So Please Describe : ____________________

Has there ever been significant seepages at this site? YES ________ NO x________

If So When? ______________________________

IF So Please Describe: ______________________________

Has there ever been any measures undertaken to monitor/lower Phreatic water table levels based on past seepages or breaches at this site? YES ________ [✓ NO]

If so, which method (e.g., piezometers, gw pumping,...)? ____________________

If so Please Describe : ____________________

Coal Combustion Dam Inspection Checklist Form

US Environmental Protection Agency

Site Name: MARION GENERATING STATION

Date: 05/25/2011

Unit Name: POND 4

Operator's Name: SOUTHERN ILLINOIS POWER CO-OP

Unit I.D.:

Hazard Potential Classification: High Significant [✓ Low]

Inspector's Name: BRIAN HAVENS + MATT GARDELLA

Check the appropriate box below. Provide comments when appropriate. If not applicable or not available, record "N/A". Any unusual conditions or construction practices that should be noted in the comments section. For large diked embankments, separate checklists may be used for different embankment areas. If separate forms are used, identify approximate area that the form applies to in comments.

	Yes	No		Yes	No
1. Frequency of Company's Dam Inspections?	DAILY BUT UNDOCUMENTED		18. Sloughing or bulging on slopes?		X
2. Pool elevation (operator records)?	502		19. Major erosion or slope deterioration?		X
3. Decant inlet elevation (operator records)?	UNKNOWN		20. Decant Pipes:	■	■
4. Open channel spillway elevation (operator records)?	N/A		Is water entering inlet, but not exiting outlet?		X
5. Lowest dam crest elevation (operator records)?	504.8		Is water exiting outlet, but not entering inlet?		X
6. If instrumentation is present, are readings recorded (operator records)?	N/A	N/A	Is water exiting outlet flowing clear?	X	
7. Is the embankment currently under construction?		X	21. Seepage (specify location, if seepage carries fines, and approximate seepage rate below):	■	■
8. Foundation preparation (remove vegetation,stumps topsoil in area where embankment fill will be placed)?	UNKNOWN		From underdrain?		X
9. Trees growing on embankment? (If so, indicate largest diameter below)		X	At isolated points on embankment slopes?		X
10. Cracks or scarps on crest?		X	At natural hillside in the embankment area?		X
11. Is there significant settlement along the crest?		X	Over widespread areas?		X
12. Are decant trashracks clear and in place?	N/A	N/A	From downstream foundation area?		X
13. Depressions or sinkholes in tailings surface or whirlpool in the pool area?		X	"Boils" beneath stream or ponded water?		X
14. Clogged spillways, groin or diversion ditches?		X	Around the outside of the decant pipe?		X
15. Are spillway or ditch linings deteriorated?	N/A	N/A	22. Surface movements in valley bottom or on hillside?		X
16. Are outlets of decant or underdrains blocked?		X	23. Water against downstream toe?	N/A	N/A INCISED
17. Cracks or scarps on slopes?		X	24. Were Photos taken during the dam inspection?	X	

Major adverse changes in these items could cause instability and should be reported for further evaluation. Adverse conditions noted in these items should normally be described (extent, location, volume, etc.) in the space below and on the back of this sheet.

Inspection Issue #	Comments
2, 3, 5	POOL ELEV. TAKEN FROM PLANT SURVEY DRAWINGS AND WAS NOT POSSIBLE TO MEASURE AT TIME OF INSPECTION

U. S. Environmental Protection Agency

Coal Combustion Waste (CCW)
Impoundment Inspection

Impoundment NPDES Permit # IL 0004316

INSPECTOR BRIAN HAVENS
MATT GARDELLA

Date 05/25/2011

Impoundment Name POND 4
Impoundment Company SOUTHERN ILLINOIS POWER CO-OP
EPA Region 5
State Agency (Field Office) Addresss 2309 WEST MAIN STREET
MARION, IL 62959
Name of Impoundment POND 4
(Report each impoundment on a separate form under the same Impoundment NPDES Permit number)

New x Update ______

	Yes	No
Is impoundment currently under construction?		x
Is water or ccw currently being pumped into the impoundment?	x	

IMPOUNDMENT FUNCTION: CLARIFICATION POND FOR ASH PONDS 1+2 PRIOR TO DISCHARG

Nearest Downstream Town : Name CREAL SPRINGS, IL
Distance from the impoundment APPROXIMATELY 6 MILES
Impoundment
Location:

Longitude	88	Degrees	57	Minutes	19	Seconds
Latitude	37	Degrees	37	Minutes	22	Seconds
State	ILLINOIS	County	WILLIAMSON			

Does a state agency regulate this impoundment? YES ______ NO x (DAM SAFETY NOT MONITORED, ONLY DISCHARGE)

If So Which State Agency? ILLINOIS ENVIRONMENTAL PROTECTION AGENCY

HAZARD POTENTIAL (In the event the impoundment should fail, the following would occur):

______ **LESS THAN LOW HAZARD POTENTIAL:** Failure or misoperation of the dam results in no probable loss of human life or economic or environmental losses.

__x__ **LOW HAZARD POTENTIAL:** Dams assigned the low hazard potential classification are those where failure or misoperation results in no probable loss of human life and low economic and/or environmental losses. Losses are principally limited to the owner's property.

______ **SIGNIFICANT HAZARD POTENTIAL:** Dams assigned the significant hazard potential classification are those dams where failure or misoperation results in no probable loss of human life but can cause economic loss, environmental damage, disruption of lifeline facilities, or can impact other concerns. Significant hazard potential classification dams are often located in predominantly rural or agricultural areas but could be located in areas with population and significant infrastructure.

______ **HIGH HAZARD POTENTIAL:** Dams assigned the high hazard potential classification are those where failure or misoperation will probably cause loss of human life.

DESCRIBE REASONING FOR HAZARD RATING CHOSEN:

POND IS ~~INCISED~~ Cross Valley AND FAILURE IS ~~NOT A LIKELY PROBABILITY~~ Possible. MISOPERATION COULD OVERFILL PONDS 1 + 2 WITH SLURRY. THIS WOULD LIKELY RESULT IN PONDS 1 + 2 OVERTOPPING INTO POND 4 WHICH WOULD THEN HAVE TO FILL AND OVERTOP BEFORE ENVIRONMENTAL OR ECONOMIC IMPACTS WOULD BE SEEN. THERE ARE NO FACILITIES LOCATED ADJACENT TO THE IMPOUNDMENTS THAT WOULD LIKELY POSE A LOSS OF LIFE CIRCUMSTANCE IN THE EVENT OF MISOPERATION/FAILURE. DAMAGE IN THE CASE OF MISOPERATION/FAILURE WOULD LIKELY BE CONTAINED ON THE OWNERS PROPERTY. IT IS OUR UNDERSTANDING THAT THE IMPOUNDMENTS WERE NOT CONSTRUCTED OVER WET ASH, SLAG OR OTHER UNSUITABLE MATERIALS SIMILAR TO THE KINGSTON TVA SITE.

CONFIGURATION:

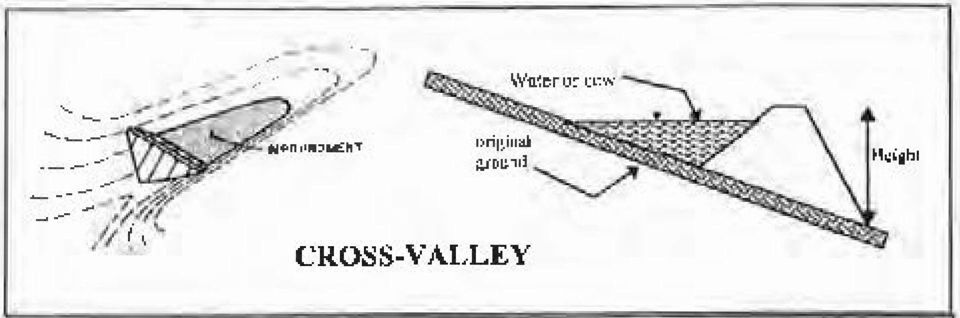

CROSS-VALLEY

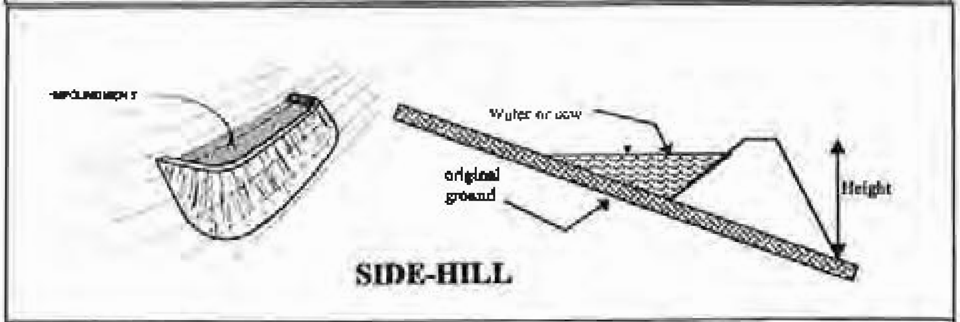

SIDE-HILL

DIKED

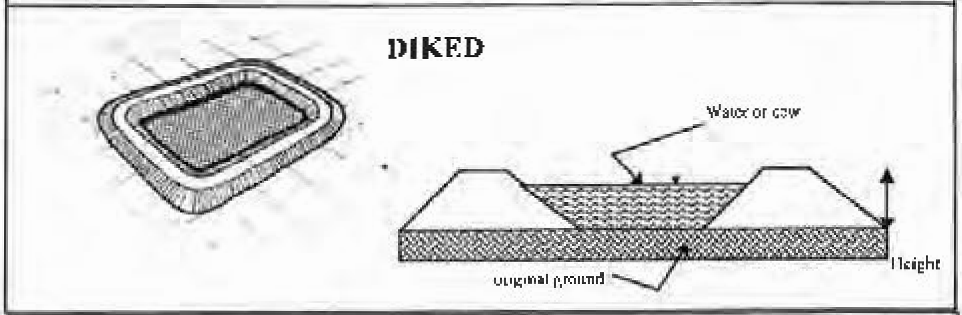

INCISED

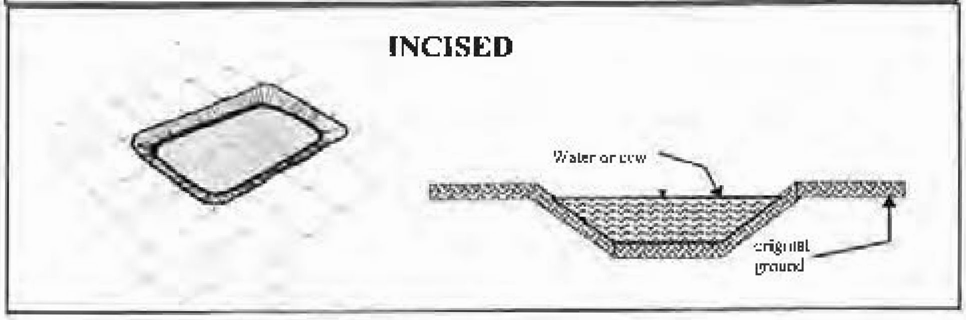

_X_ Cross-Valley
____ Side-Hill
____ Diked
____ Incised (form completion optional)
____ Combination Incised/Diked

Embankment Height ~25 feet
Pool Area ~ 4.2 acres
Current Freeboard ~5 feet

Embankment Material Earthfill
Liner [illegible]
Liner Permeability [illegible]

TYPE OF OUTLET (Mark all that apply)

N/A **Open Channel Spillway**
____ Trapezoidal
____ Triangular
____ Rectangular
____ Irregular

____ depth
____ bottom (or average) width
____ top width

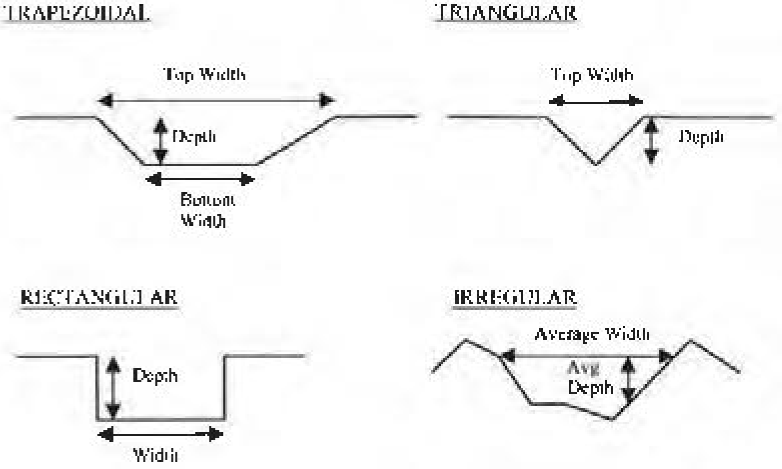

x **Outlet**

~24" inside diameter

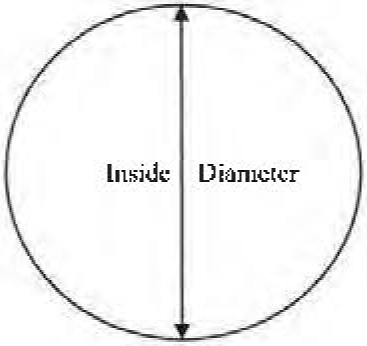

Material
____ corrugated metal
x welded steel
____ concrete
____ plastic (hdpe, pvc, etc.)
____ other (specify) ____________

Is water flowing through the outlet? YES x NO ____

N/A **No Outlet**

N/A **Other Type of Outlet** (specify) ____________

The Impoundment was Designed By unknown

Has there ever been a failure at this site? YES ________ NO X

If So When? ____________________

If So Please Describe : ____________________

Has there ever been significant seepages at this site? YES _______ NO x

If So When? ____________________

IF So Please Describe: ____________________

Has there ever been any measures undertaken to monitor/lower Phreatic water table levels based on past seepages or breaches at this site? YES ________ NO x

If so, which method (e.g., piezometers, gw pumping,...)? ____________________

If so Please Describe : ____________________

APPENDIX B

Response Letter to the EPA's Request for Information

SIPC
**Southern Illinois
Power Cooperative**

11543 Lake of Egypt Road
Marion, IL 62959
(618) 964-1448 Fax (618) 964-1867

January 5, 2011

Mr. Craig Dufficy
US Environmental Protection Agency
Two Potomac Yard
Washington, DC 20460

RE: Information Request Regarding Surface Impoundments at the Marion Plant

Dear Mr. Dufficy,

Enclosed you will find the information requested by USEPA pertaining to surface impoundments at the Marion Plant. Should you have any questions regarding the enclosed material or if more information is needed, please feel free to contact me.

Sincerely,

Jason McLaurin
Environmental Coordinator
618-964-2446

Touchstone Energy®
The power of human connections

SOUTHERN ILLINOIS POWER COOPERATIVE IMPOUNDMENT INFORMATION

SOUTH FLY ASH POND DAM

1. Rated as a Class III damn. (Low Hazard Potential)
2. Built in 1979
3. Receives residuals from flue gas emission controls.
4. Designed by Burns & McDonnell.
5. Class III dams are required to inspected every 5 years by a professional engineer. Licensed engineers from Clarida & Ziegler Engineering Company in Marion, IL perform the required inspections on this damn.
6. NO State or Federal safety inspections have been performed on this damn. All necessary operation and safety inspections have been performed by Clarida & Ziegler Engineering Company.
7. See answer #6.
8. This impoundment is roughly 10 acres in size and has a holding capacity of 103 Acre feet or roughly 34,000,000 gallons. The impoundment is part of SIPC's permitted NPDES settling pond system and no material permanently stored in it.
9. No spills or unpermitted releases have occurred in the pond within the last ten years.
10. Southern Illinois Power Cooperative owns and operates this impoundment.

FLY ASH DISPOSAL POND B-3 DAM

1. Rated as a Class III damn. (Low Hazard Potential)
2. Built in 1979
3. Receives residuals from flue gas emission controls
4. Designed by Burns & McDonnell
5. Class III dams are required to be inspected every 5 years by a professional engineer. Licensed engineers from Clarida & Ziegler Engineering Company in Marion, IL perform the required inspections on this damn.
6. NO State or Federal safety inspections have been performed on this damn. All necessary operation and safety inspections have been performed by Clarida & Ziegler Engineering Company.
7. See answer #6.
8. This impoundment has a holding capacity of 45 Acre feet or roughly 14,550,000 gallons. The impoundment is part of SIPC's permitted NPDES settling pond system and no material permanently stored in it.
9. No spills or unpermitted releases have occurred in the pond within the last ten years.
10. Southern Illinois Power Cooperative owns and operates this impoundment.

POND A-1

1. No hazard rating.
2. Built in 1979
3. Receives residuals from flue gas emission controls.
4. Designed by Burns & McDonnell.
5. N/A.
6. N/A.
7. See answer #6.
8. This impoundment has a holding capacity of roughly 32 Acre feet or roughly 10,500,000 gallons. The impoundment is part of SIPC's permitted NPDES settling pond system and no material permanently stored in it.
9. No spills or unpermitted releases have occurred in the pond within the last ten years.
10. Southern Illinois Power Cooperative owns and operates this impoundment.

POND 4

1. No hazard rating.
2. Built in 1979
3. Receives residuals from flue gas emission controls and over flow water from bottom ash (boiler slag) holding ponds.
4. Designed by Burns & McDonnell.
5. N/A.
6. N/A.
7. See answer #6.
8. This impoundment has a holding capacity of roughly 55 Acre feet or roughly 18,100,000 gallons. The impoundment is part of SIPC's permitted NPDES settling pond system and no material permanently stored in it.
9. No spills or unpermitted releases have occurred in the pond within the last ten years.
10. Southern Illinois Power Cooperative owns and operates this impoundment.

POND 1

1. No hazard rating.
2. Built in 1979
3. Receives bottom ash (boiler slag) slurry water.

4. N/A.
5. N/A.
6. N/A.
7. See answer #6.
8. This impoundment has a holding capacity of roughly 9 Acre feet or roughly 3,000,000 gallons. Bottom Ash (Boiler Slag) is temporally stored in pond before being removed for beneficial use.
9. No spills or unpermitted releases have occurred in the pond within the last ten years.
10. Southern Illinois Power Cooperative owns and operates this impoundment.

POND 2

1. No hazard rating.
2. Built in 1979
3. Receives bottom ash (boiler slag) slurry water.
4. N/A.
5. N/A.
6. N/A.
7. See answer #6.
8. This impoundment has a holding capacity of roughly 15 Acre feet or roughly 5,000,000 gallons. Bottom Ash (Boiler Slag) is temporally stored in pond before being removed for beneficial use.
9. No spills or unpermitted releases have occurred in the pond within the last ten years.
10. Southern Illinois Power Cooperative owns and operates this impoundment.

POND S -1

1. No hazard rating.
2. Built in 1996
3. Receives residuals from flue gas emission controls.
4. N/A.
5. N/A.
6. N/A.
7. See answer #6.
8. This impoundment has a holding capacity of roughly 71 Acre feet or roughly 23,000,000 gallons. The impoundment is part of SIPC's permitted NPDES settling pond system and no material permanently stored in it.
9. No spills or unpermitted releases have occurred in the pond within the last ten years.
10. Southern Illinois Power Cooperative owns and operates this impoundment.

~~POND 3~~

1. ~~No hazard rating.~~
2. ~~Built in 1979~~
3. ~~Receives residuals from flue gas emission controls.~~
4. ~~N/A.~~
5. ~~N/A.~~
6. ~~N/A.~~
7. ~~See answer #6.~~
8. ~~This impoundment has a holding capacity of roughly 20 Acre feet or roughly 6,600,000 gallons. The impoundment is part of SIPC's permitted NPDES settling pond system and no material permanently stored in it.~~
9. ~~No spills or unpermitted releases have occurred in the pond within the last ten years.~~
10. ~~Southern Illinois Power Cooperative owns and operates this impoundment.~~

POND 3A

1. No hazard rating.
2. Built in 1992
3. Receives residuals from flue gas emission controls.
4. N/A.
5. N/A.
6. N/A.
7. See answer #6.
8. This impoundment has a holding capacity of roughly 20 Acre feet or roughly 6,600,000 gallons. The impoundment is part of SIPC's permitted NPDES settling pond system and no material permanently stored in it.
9. No spills or unpermitted releases have occurred in the pond within the last ten years.
10. Southern Illinois Power Cooperative owns and operates this impoundment.

POND 3

1. No hazard rating.
2. Built in 1979
3. Receives residuals from flue gas emission controls.
4. Designed by Burns & McDonnell.
5. N/A.
6. N/A.
7. See answer #6.

8. This impoundment has a holding capacity of roughly 20 Acre feet or roughly 6,600,000 gallons. The impoundment is part of SIPC's permitted NPDES settling pond system and no material permanently stored in it.
9. No spills or unpermitted releases have occurred in the pond within the last ten years.
10. Southern Illinois Power Cooperative owns and operates this impoundment.

POND S - 6

1. No hazard rating.
2. Built in 1988.
3. Receives residuals from flue gas emission controls.
4. N/A.
5. N/A.
6. N/A.
7. See answer #6.
8. This impoundment has a holding capacity of roughly 16 Acre feet or roughly 5,300,000 gallons. The impoundment is part of SIPC's permitted NPDES settling pond system and no material permanently stored in it.
9. No spills or unpermitted releases have occurred in the pond within the last ten years.
10. Southern Illinois Power Cooperative owns and operates this impoundment.

POND S - 2

1. No hazard rating.
2. Built in 1996
3. Receives residuals from flue gas emission controls.
4. N/A.
5. N/A.
6. N/A.
7. See answer #6.
8. This impoundment has a holding capacity of roughly 25 Acre feet or roughly 8,200,000 gallons. The impoundment is part of SIPC's permitted NPDES settling pond system and no material permanently stored in it.
9. No spills or unpermitted releases have occurred in the pond within the last ten years.
10. Southern Illinois Power Cooperative owns and operates this impoundment.

POND S-3

1. No hazard rating.
2. Built in 1996
3. Receives residuals from flue gas emission controls.
4. N/A.
5. N/A.
6. N/A.
7. See answer #6.
8. This impoundment has a holding capacity of roughly 20 Acre feet or roughly 6,600,000 gallons. The impoundment is part of SIPC's permitted NPDES settling pond system and no material permanently stored in it.
9. No spills or unpermitted releases have occurred in the pond within the last ten years.
10. Southern Illinois Power Cooperative owns and operates this impoundment.

COAL HANDLING PONDS

1. No hazard rating.
2. Built in 1979
3. Receives residuals from flue gas emission controls.
4. N/A.
5. N/A.
6. N/A.
7. See answer #6.
8. This impoundment has a holding capacity of roughly 7 Acre feet or roughly 2,300,000 gallons. The impoundment is part of SIPC's permitted NPDES settling pond system and no material permanently stored in it.
9. No spills or unpermitted releases have occurred in the pond within the last ten years.
10. Southern Illinois Power Cooperative owns and operates this impoundment.

Southern Illinois Power Cooerative Pond Information
Jason McLaurin
to:
Jana Englander
03/02/2011 11:13 AM
Show Details

Ms. Englander,

Below you should find the information you were requesting. Should you have any additional questions, please let me know.

Pond Name and Height of the Management Unit.
South Fly Ash Pond = 23' (Feet)
Fly Ash Disposal Pond B-3 = 38'
Pond A-1 = 25'
Pond 4 = 0
Pond 1 = 0
Pond 2 = 0
Pond S-1 = 0
Pond 3 = 24'
Pond 3A = 0
Pond S – 6 = 10'
Pond S-2 = 0
Pond S-3 = 0 Feet
Coal Handling Ponds = 0

Please let me know you received this e-mail. (For some reason I have been getting an automated return)

Sincerely,

Jason McLaurin
Southern Illinois Power Cooperative

CB

UNITED STATES ENVIRONMENTAL PROTECTION AGENCY
WASHINGTON, D.C. 20460

DEC 22 2010

OFFICE OF
SOLID WASTE AND
EMERGENCY RESPONSE

Approved OMB 2020-0003
Approval Expires 12/31/2010

RECEIVED
DEC 27 2010
So. IL. Power Co-Op

Via CERTIFIED MAIL/RETURN RECEIPT REQUESTED

Mr. Greg Bain
Manager, Plant Operations
Southern Illionois Power Cooperative Power
11543 Lake of Egypt Road
Marion, Illionois 62959-8500

RE: Request for Information Under Section 104 (e) of the Comprehensive Environmental Response, Compensation, and Liability Act, 42 U.S.C. 9604(e)-Marion Plant

Dear Mr. Greg Bain,

The United States Environmental Protection Agency is requesting information relating to the surface impoundments or similar diked or bermed management unit(s) or management units designated as landfills which receive liquid-borne material from a surface impoundment used for the storage or disposal of residuals or by-products from the combustion of coal, including, but not limited to, fly ash, bottom ash, boiler slag, or flue gas emission control residuals.

EPA is requesting this information pursuant to the authority granted to it under Section 104 (e) of the Comprehensive Environmental Response, Compensation, and Liability Act ("CERCLA"), 42 U.S.C. 9604(e) which provides in relevant part that whenever the Agency has reason to believe that there may be a release or a threat of a release of a pollutant or contaminant, they may require any person who has or may have information to furnish information or documents relating to the matter, including the identification, nature, and quantity of materials which have been or are generated, treated, stored or disposed at the facility and the nature or extent of a release or a threatened release. EPA believes that the information requested is essential to an evaluation of the threat of releases of pollutants or contaminants from these units.

EPA hereby requires that you furnish to EPA, within ten (10) business days of receipt of this letter a response to each request for information set forth in Enclosure A, including all documents responsive to such request.

Please provide a full and complete response to each request for information set forth in Enclosure A. The provisions of Section 104 of CERCLA authorize EPA to pursue penalties for failure to comply with or respond adequately to an information request under Section 104(e). In addition, providing false, fictitious or fraudulent statements or representations may subject you to criminal penalties under 18 U.S.C. 1001.

Your response must include the following certification signed and dated by an authorized representative of Southern Illionois Power Cooperative Power.

> I certify that the information contained in this response to EPA's request for information and the accompanying documents is true, accurate, and complete. As to the identified portions of this response for which I cannot personally verify their accuracy, I certify under penalty of law that this response and all attachments were prepared in accordance with a system designed to assure that qualified personnel properly gather and evaluate the information submitted. Based on my inquiry of the person or persons who manage the system, those persons directly responsible for gathering the information, the information submitted is, to the best of my knowledge, true, accurate, and complete. I am aware that there are significant penalties for submitting false information, including the possibility of fines and imprisonment for knowing violations.

Signature:
Name: LEONARD F. HOPKINS, P.E.
Title: FUEL & COMPLIANCE MANAGER

This request has been reviewed and approved by the Office of Management and Budget pursuant to the Paperwork Reduction Act, 44 U.S.C., 3501-3520.

Please send your reply to:

Mr. Craig Duffiey
US Environmental Protection Agency (5304P)
1200 Pennsylvania Avenue, NW
Washington, DC 20460

If you are using overnight or hand delivery mail, please use the following address:

Mr. Craig Duffiey
US Environmental Protection Agency
Two Potomac Yard

APPENDIX C

Documents Provided for Review
Ponds 1 & 2 Bottom Ash Plan & Elevation – March 1962

INSPECTION REPORT

FOR THE

SOUTH FLY ASH POND DAM

IDNR-OWR PERMIT NO. 19403
DAM I.D. NO. IL50100

DECEMBER, 2008

LOCATED IN

SECTION 26
T10S, R2E
WILLIAMSON COUNTY, ILLINOIS

PREPARED FOR

SOUTHERN ILLINOIS POWER CO-OP
11543 LAKE OF EGYPT ROAD
MARION, ILLINOIS 62959

PREPARED BY

CLARIDA ENGINEERING CO.
308 SOUTH COURT STREET
MARION, ILLINOIS 62959

ILLINOIS DEPARTMENT OF NATURAL RESOURCES
DIVISION OF WATER RESOURCES

DAM INSPECTION REPORT

NAME OF DAM South Fly Ash Pond   COUNTY Williamson

LOCATION Section 26, Township 10S, Range 2E

OWNER Southern Illinois Power Co-op (NAME)   618-964-1448, 618-964-1701 (Emerg.) (TELEPHONE)

11543 Lake of Egypt Road (STREET)

Marion (CITY)   62959 (ZIP)

PERMIT NO. 19403   CLASS OF DAM III

TYPE OF DAM Earthfill

TYPE OF SPILLWAY Drop Inlet

DATE (S) INSPECTED 12/3/2008

WEATHER WHEN INSPECTED Cloudy

TEMPERATURE WHEN INSPECTED 55°

POOL ELEVATION WHEN INSPECTED ~ 541

TAILWATER ELEVATION WHEN INSPECTED --

INSPECTION PERSONNEL:

W. Brian Ziegler

NAME W. Brian Ziegler   TITLE President

Clarida & Ziegler Engineering Co.

12/10/08

NAME   TITLE

NAME   TITLE

W. BRIAN ZIEGLER
062-053881
LICENSED PROFESSIONAL ENGINEER OF ILLINOIS

PROFESSIONAL ENGINEER'S SEAL

Exp. 11/30/09

CONDITION CODES

N.E. - No evidence of problem

G.C. - Good Condition

M.M. - Item needing minor repairs within the year. Safety integrity not yet imperiled

I.M. - Item needing immediate maintenance to restore or insure present safety integrity

E.C. - Emergency condition which if not immediately repaired or other appropriate measures taken could lead to breach of dam

O.B. - Condition requires regular observation to insure condition does not become worse

N.A. - Not applicable to this dam

N.I. - Not inspected/list reason for non-inspection under deficiencies

EARTH EMBANKMENT

ITEM	CONDITION	DEFICIENCIES	RECOMMENDED REMEDIAL MEASURES AND IMPLEMENTATION SCHEDULE
Surface Cracks	N.E.		
Vertical & Horizontal Alignment of Crest	G.C.		
Unusual Movement or Cracking At or Beyond Toe	N.E.		
Sloughing or Erosion of Embankment and Abutment Slopes	N.E.		
Upstream Face Slope Protection	G.C.	**Reeds are established along waterline of north embankment.**	**Condition has not worsened in the last year. Will continue to monitor.**
Seepage	G.C.	Seepage area along **downstream toe at southwest corner of levee.**	**Corrected in 2004. Removed buried rip-rap in dam.**
Filter & Filter Drains	N.A.		

EARTH EMBANKMENT
(Continued)

ITEM	CONDITION	DEFICIENCIES	RECOMMENDED REMEDIAL MEASURES AND IMPLEMENTATION SCHEDULE
Animal Damage	N.E.		
Embankment Drainage Ditches	M.M.	Downstream drainage ditch standing water	Investigate the cause. Re-grade ditch to get to drain. Re-inspect to ensure there is no seepage.
Vegetative Cover	G.C.		
Other (Name)			
Other			
Other			

CONCRETE OR MASONRY DAMS

ITEM	CONDITION	DEFICIENCIES	RECOMMENDED REMEDIAL MEASURES AND IMPLEMENTATION SCHEDULE
Seepage	N.A.		
Structure to Abutment/ Embankment Junctions	N.A.		
Water Passages	N.A.		
Foundation	N.A.		
Surface Cracks in Concrete Surfaces	N.A.		
Structural Cracking	N.A.		

CONCRETE OR MASONRY DAMS
(Continued)

ITEM	CONDITION	DEFICIENCIES	RECOMMENDED REMEDIAL MEASURES AND IMPLEMENTATION SCHEDULE
Vertical and Horizontal Alignment	N.A.		
Monolith Joints	N.A.		
Construction Joints	N.A.		
Spalling of Concrete	N.A.		
Filters, Drains, etc.	N.A.		
Riprap	N.A.		
Other (Name)			

IF DAM IS GATED - Fill out portion of Principal Spillway Form related to Gated Spillways

PRINCIPAL SPILLWAY
APPROACH CHANNEL

ITEM	CONDITION	DEFICIENCIES	RECOMMENDED REMEDIAL MEASURES AND IMPLEMENTATION SCHEDULE
Debris	N.A.		
Side Slope Stability	N.A.		
Slope Protection	N.A.		
Other (Name)			
Other			
Other			
Other			

PRINCIPAL SPILLWAY

☒ Drop Inlet Structure ☐ Overflow Spillway Structure ☐ Gated

ITEM	CONDITION	DEFICIENCIES	RECOMMENDED REMEDIAL MEASURES AND IMPLEMENTATION SCHEDULE
Erosion, Spalling, Cavitation	N.A.		
Structure to Embankment Junction	G.C.		
Drains	N.A.		
Seepage Around or Into Structure	N.E.		
Surface Cracks	N.E.		
Structural Cracks	N.E.		

IF SPILLWAY IS GATED FILL OUT GATES SECTION

PRINCIPAL SPILLWAY

(Continued)

☒ Drop Inlet Structure ☐ Overflow Spillway Structure ☐ Gated

ITEM	CONDITION	DEFICIENCIES	RECOMMENDED REMEDIAL MEASURES AND IMPLEMENTATION SCHEDULE
Alignment of Abutment Walls	N.A.		
Construction Joints	N.A.		
Filter and Filter Drains	N.A.		
Trash Racks	N.A.		
Bridge & Piers	N.A.		
Differential Settlement	N.A.		
Other (Name)			

IF SPILLWAY IS GATED FILL OUT GATES SECTION

PRINCIPAL SPILLWAY
(Continued)

☒ Conduit ☐ Gated

ITEM	CONDITION	DEFICIENCIES	RECOMMENDED REMEDIAL MEASURES AND IMPLEMENTATION SCHEDULE
Erosion, Spalling, Cavitation	N.A.		
Joint Separation	N.E.		
Seepage Around or Into Conduit	N.E.		
Surface Cracks	N.E.		
Structural Cracks	N.E.		
Trash Racks	N.A.		
Differential Settlement	N.E.		
Alignment	G.C.		
Other (Name)			

IF SPILLWAY IS GATED FILL OUT GATES SECTION

PRINCIPAL SPILLWAY
(Continued)

☐ Chute

ITEM	CONDITION	DEFICIENCIES	RECOMMENDED REMEDIAL MEASURES AND IMPLEMENTATION SCHEDULE
Erosion, Cavitation, Spalling	N.A.		
Structure to Embankment Junction	N.A.		
Construction Joints	N.A.		
Expansion & Contraction Joints	N.A.		
Differential Settlement	N.A.		
Surface Cracks	N.A.		
Structural Cracks	N.A.		
Wall Alignment	N.A.		
Other (Name)			

IF SPILLWAY IS GATED FILL OUT GATES SECTION

GATES

☐ Principal Spillway ☐ Dewatering ☐ Other:

ITEM	CONDITION	DEFICIENCIES	RECOMMENDED REMEDIAL MEASURES AND IMPLEMENTATION SCHEDULE
Gate Sill	N.A.		
Gate Seals	N.A.		
Gate and Frame	N.A.		
Operating Machineery	N.A.		
Emergency Operating Machinery	N.A.		
Other (Name)			
Other			

OUTLET WORKS

(IF SEPARATE FROM PRINCIPAL SPILLWAY STRUCTURE)

ITEM	CONDITION	DEFICIENCIES	RECOMMENDED REMEDIAL MEASURES AND IMPLEMENTATION SCHEDULE
Erosion, Spalling, Cavitation	N.A.		
Joint Separation	N.A.		
Seepage Around or Into Conduit	N.A.		
Intake Structure	N.A.		
Outlet Structure	N.A.		
Outlet Channel	N.A.		

OUTLET WORKS
(Continued)

ITEM	CONDITION	DEFICIENCIES	RECOMMENDED REMEDIAL MEASURES AND IMPLEMENTATION SCHEDULE
Riprap	N.A.		
Other (Name)			
Other			
Other			

ENERGY DISSIPATOR

☒ Principal Spillway ☐ Outlet Works

Type: **Reinforced concrete impact-type**

ITEM	CONDITION	DEFICIENCIES	RECOMMENDED REMEDIAL MEASURES AND IMPLEMENTATION SCHEDULE
Erosion, Spalling, Cavitation	**G.C.**		
Structure to Embankment Junction	**G.C.**		
Construction Joints	**G.C.**		
Surface Cracks	**N.E.**		
Structural Cracks	**N.E.**		
Differential Settlement	**N.E.**		
Expansion & Contraction Joints	**G.C.**		

ENERGY DISSIPATOR

(Continued)

☒ Principal Spillway ☐ Outlet Works

ITEM	CONDITION	DEFICIENCIES	RECOMMENDED REMEDIAL MEASURES AND IMPLEMENTATION SCHEDULE
Riprap	N.E.		
Outlet Channel	G.C.		
Debris	N.E.		
Other (Name)			

EMERGENCY SPILLWAY

☐ Earth ☐ Other: Name ____________________

ITEM	CONDITION	DEFICIENCIES	RECOMMENDED REMEDIAL MEASURES AND IMPLEMENTATION SCHEDULE
Erosion	N.A.		
Weeds, Logs, Other Obstructions	N.A.		
Side Slope Sloughing	N.A.		
Vegetation	N.A.		
Sedimentation	N.A.		
Riprap	N.A.		
Settlement of Crest	N.A.		
Downstream Channel	N.A.		
Other (Name)			

SUMMARY OF MAINTENANCE DONE AND/OR REPAIRS MADE SINCE LAST INSPECTION

DATE OF PRESENT INSPECTION **December 3, 2008**

DATE OF LAST INSPECTION **December 19, 2007**

1. EARTH EMBANKMENT

   None

2. CONCRETE MASONRY DAMS

   N.A.

3. PRINCIPAL SPILLWAY

   None

4. OUTLET WORKS

   None

5. EMERGENCY SPILLWAY

   None

DOWNSTREAM DEVELOPMENT
APPROXIMATE WIDTH OF AFFECTED FLOODPLAIN 0.05 MILES

MILES DOWNSTREAM FROM DAM	DOWNSTREAM DEVELOPMENT												Loss of Life Potential			Economic Loss Potential		
	OCCUPIED HOMES	UNOCCUPIED HOMES	AGRICULTURAL BUILDINGS	INDUSTRIAL BUILDINGS	COMMERCIAL BUILDINGS	SCHOOLS	HOSPITALS	ROADS & BRIDGES	DAMS	OVERHEAD UTILITIES	OTHER DEVELOPMENT (Name)	OTHER DEVELOPMENT (Name)	NONE	1 TO 10	OVER 10	MINIMAL EXPECTED	APPRECIABLE EXPECTED	EXCESSIVE EXPECTED
0 to 1/4								X					X			X		
1/4 to 1/2													X			X		
1/2 to 3/4													X			X		
3/4 to 1													X			X		
1 to 1-1/4													X			X		
1-1/4 to 1-1/2													X			X		
1-1/2 to 1-3/4													X			X		
1-3/4 to 2													X			X		
OVER 2													X			X		

The number of homes, buildings, or other items in the floodplain downstream of the dam should be placed in the appropriate row and column to designate their location.

SKETCH IN DEVELOPMENTS DOWNSTREAM OF THE DAM

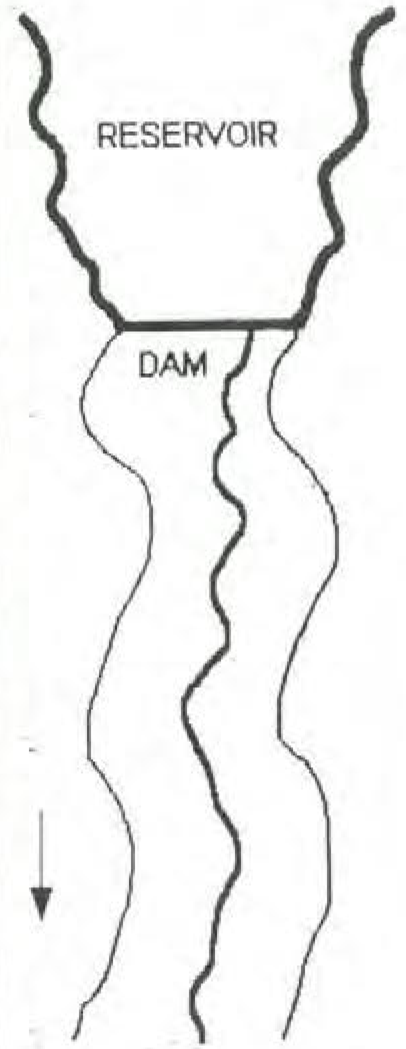

PROJECT NAME: SIPC South Fly Ash Pond	PROJECT NO.: 08156	DATE: 12/03/08	TIME: 2:30 pm	PHOTOS BY: WBZ

PHOTO DESCRIPTION

Looking at area needing grading.

PHOTO DESCRIPTION

Looking East along dam

PROJECT NAME: SIPC South Fly Ash Pond	PROJECT NO.: 08156	DATE: 12/03/08	TIME: 2:30 pm	PHOTOS BY: WBZ

PHOTO DESCRIPTION

Looking west at area needing grading

PHOTO DESCRIPTION

Looking at North-West side

INSPECTION REPORT

FOR THE

FLY ASH DISPOSAL POND
B-3 DAM

IDNR-OWR PERMIT NO. 18629
DAM I.D. NO. IL50160

DECEMBER, 2008

LOCATED IN

SECTION 26
T10S, R2E
WILLIAMSON COUNTY, ILLINOIS

PREPARED FOR

SOUTHERN ILLINOIS POWER CO-OP
11543 LAKE OF EGYPT ROAD
MARION, ILLINOIS 62959

PREPARED BY

CLARIDA ENGINEERING CO.
308 SOUTH COURT STREET
MARION, ILLINOIS 62959

ILLINOIS DEPARTMENT OF NATURAL RESOURCES

DIVISION OF WATER RESOURCES

DAM INSPECTION REPORT

NAME OF DAM: Fly Ash Disposal Pond B-3 Dam

COUNTY: Williamson

LOCATION: Section 26, Township 10S, Range 2E

OWNER: Southern Illinois Power Co-op (NAME)

618-964-1448, 618-964-1701 (Emerg.) (TELEPHONE)

11543 Lake of Egypt Road (STREET)

Marion (CITY) 62959 (ZIP)

PERMIT NO.: 18629

CLASS OF DAM: III

TYPE OF DAM: Earthfill

TYPE OF SPILLWAY: Drop Inlet

DATE (S) INSPECTED: 12/3/2008

WEATHER WHEN INSPECTED: Cloudy

TEMPERATURE WHEN INSPECTED: 55°

POOL ELEVATION WHEN INSPECTED: ~ 499

TAILWATER ELEVATION WHEN INSPECTED: --

INSPECTION PERSONNEL:

W. Brian Ziegler

NAME: W. Brian Ziegler
Clarida Engineering Co.
12/10/08

TITLE: President

NAME:

TITLE:

NAME:

TITLE:

W. BRIAN ZIEGLER
062-053831

PROFESSIONAL ENGINEER'S SEAL

E.P.
11/30/09

CONDITION CODES

N.E. - No evidence of problem

G.C. - Good Condition

M.M. - Item needing minor repairs within the year. Safety integrity not yet imperiled

I.M. - Item needing immediate maintenance to restore or insure present safety integrity

E.C. - Emergency condition which if not immediately repaired or other appropriate measures taken could lead to breach of dam

O.B. - Condition requires regular observation to insure condition does not become worse

N.A. - Not applicable to this dam

N.I. - Not inspected/list reason for non-inspection under deficiencies

EARTH EMBANKMENT

ITEM	CONDITION	DEFICIENCIES	RECOMMENDED REMEDIAL MEASURES AND IMPLEMENTATION SCHEDULE
Surface Cracks	N.E.		
Vertical & Horizontal Alignment of Crest	G.C.		
Unusual Movement or Cracking At or Beyond Toe	N.E.		
Sloughing or Erosion of Embankment and Abutment Slopes	G.C.		
Upstream Face Slope Protection	G.C.		
Seepage	N.E.		
Filter & Filter Drains	G.C.		

EARTH EMBANKMENT

(Continued)

ITEM	CONDITION	DEFICIENCIES	RECOMMENDED REMEDIAL MEASURES AND IMPLEMENTATION SCHEDULE
Animal Damage	N.E.		
Embankment Drainage Ditches	G.C.		
Vegetative Cover	G.C.		
Other (Name)			
Other			
Other			

CONCRETE OR MASONRY DAMS

ITEM	CONDITION	DEFICIENCIES	RECOMMENDED REMEDIAL MEASURES AND IMPLEMENTATION SCHEDULE
Seepage	N.A.		
Structure to Abutment/ Embankment Junctions	N.A.		
Water Passages	N.A.		
Foundation	N.A.		
Surface Cracks in Concrete Surfaces	N.A.		
Structural Cracking	N.A.		

CONCRETE OR MASONRY DAMS

(Continued)

ITEM	CONDITION	DEFICIENCIES	RECOMMENDED REMEDIAL MEASURES AND IMPLEMENTATION SCHEDULE
Vertical and Horizontal Alignment	**N.A.**		
Monolith Joints	**N.A.**		
Construction Joints	**N.A.**		
Spalling of Concrete	**N.A.**		
Filters, Drains, etc.	**N.A.**		
Riprap	**N.A.**		
Other (Name)			

<u>IF</u> <u>DAM</u> <u>IS</u> <u>GATED</u> - Fill out portion of Principal Spillway Form related to Gated Spillways

PRINCIPAL SPILLWAY
APPROACH CHANNEL

ITEM	CONDITION	DEFICIENCIES	RECOMMENDED REMEDIAL MEASURES AND IMPLEMENTATION SCHEDULE
Debris	N.A.		
Side Slope Stability	N.A.		
Slope Protection	N.A.		
Other (Name)			
Other			
Other			
Other			

PRINCIPAL SPILLWAY

☒ Drop Inlet Structure ☐ Overflow Spillway Structure ☐ Gated

ITEM	CONDITION	DEFICIENCIES	RECOMMENDED REMEDIAL MEASURES AND IMPLEMENTATION SCHEDULE
Erosion, Spalling, Cavitation	N.E.		
Structure to Embankment Junction	G.C.		
Drains	G.C.		
Seepage Around or Into Structure	N.E.		
Surface Cracks	N.E.		
Structural Cracks	N.E.		

IF SPILLWAY IS GATED FILL OUT GATES SECTION

PRINCIPAL SPILLWAY

(Continued)

☒ Drop Inlet Structure ☐ Overflow Spillway Structure ☐ Gated

ITEM	CONDITION	DEFICIENCIES	RECOMMENDED REMEDIAL MEASURES AND IMPLEMENTATION SCHEDULE
Alignment of Abutment Walls	N.A.		
Construction Joints	N.A.		
Filter and Filter Drains	N.A.		
Trash Racks	G.C.		
Bridge & Piers	N.A.		
Differential Settlement	N.A.		
Other (Name)			

IF SPILLWAY IS GATED FILL OUT GATES SECTION

PRINCIPAL SPILLWAY

(Continued)

☒ Conduit ☐ Gated

ITEM	CONDITION	DEFICIENCIES	RECOMMENDED REMEDIAL MEASURES AND IMPLEMENTATION SCHEDULE
Erosion, Spalling, Cavitation	N.A.		
Joint Separation	N.E.		
Seepage Around or Into Conduit	N.E.		
Surface Cracks	N.E.		
Structural Cracks	N.E.		
Trash Racks	N.A.		
Differential Settlement	N.E.		
Alignment	G.C.		
Other (Name)			

IF SPILLWAY IS GATED FILL OUT GATES SECTION

PRINCIPAL SPILLWAY

(Continued)

☐ Chute

ITEM	CONDITION	DEFICIENCIES	RECOMMENDED REMEDIAL MEASURES AND IMPLEMENTATION SCHEDULE
Erosion, Cavitation, Spalling	N.A.		
Structure to Embankment Junction	N.A.		
Construction Joints	N.A.		
Expansion & Contraction Joints	N.A.		
Differential Settlement	N.A.		
Surface Cracks	N.A.		
Structural Cracks	N.A.		
Wall Alignment	N.A.		
Other (Name)			

IF SPILLWAY IS GATED FILL OUT GATES SECTION

GATES

☐ Principal Spillway ☐ Dewatering ☐ Other:

ITEM	CONDITION	DEFICIENCIES	RECOMMENDED REMEDIAL MEASURES AND IMPLEMENTATION SCHEDULE
Gate Sill	N.A.		
Gate Seals	N.A.		
Gate and Frame	N.A.		
Operating Machineery	N.A.		
Emergency Operating Machinery	N.A.		
Other (Name)			
Other			

OUTLET WORKS

(IF SEPARATE FROM PRINCIPAL SPILLWAY STRUCTURE)

ITEM	CONDITION	DEFICIENCIES	RECOMMENDED REMEDIAL MEASURES AND IMPLEMENTATION SCHEDULE
Erosion, Spalling, Cavitation	N.A.		
Joint Separation	N.A.		
Seepage Around or Into Conduit	N.A.		
Intake Structure	N.A.		
Outlet Structure	N.A.		
Outlet Channel	N.A.		

OUTLET WORKS
(Continued)

ITEM	CONDITION	DEFICIENCIES	RECOMMENDED REMEDIAL MEASURES AND IMPLEMENTATION SCHEDULE
Riprap	N.A.		
Other (Name)			
Other			
Other			

ENERGY DISSIPATOR

☒ Principal Spillway ☐ Outlet Works

Type: **Riprap**

ITEM	CONDITION	DEFICIENCIES	RECOMMENDED REMEDIAL MEASURES AND IMPLEMENTATION SCHEDULE
Erosion, Spalling, Cavitation	**N.A.**		
Structure to Embankment Junction	**N.A.**		
Construction Joints	**N.A.**		
Surface Cracks	**N.A.**		
Structural Cracks	**N.A.**		
Differential Settlement	**N.A.**		
Expansion & Contraction Joints	**N.A.**		

ENERGY DISSIPATOR

(Continued)

☒ Principal Spillway ☐ Outlet Works

ITEM	CONDITION	DEFICIENCIES	RECOMMENDED REMEDIAL MEASURES AND IMPLEMENTATION SCHEDULE
Riprap	G.C.		
Outlet Channel	G.C.		
Debris	N.E.		
Other (Name)			

EMERGENCY SPILLWAY

☒ Earth ☐ Other: Name ________________

ITEM	CONDITION	DEFICIENCIES	RECOMMENDED REMEDIAL MEASURES AND IMPLEMENTATION SCHEDULE
Erosion	N.E.		
Weeds, Logs, Other Obstructions	N.E.		
Side Slope Sloughing	N.E.		
Vegetation	N.A.		
Sedimentation	N.E.		
Riprap	G.C.		
Settlement of Crest	N.E.		
Downstream Channel	G.C.		
Other (Name)			

SUMMARY OF MAINTENANCE DONE AND/OR

REPAIRS MADE SINCE LAST INSPECTION

DATE OF PRESENT INSPECTION **December 3, 2008**

DATE OF LAST INSPECTION **December 19, 2007**

1. EARTH EMBANKMENT

None

2. CONCRETE MASONRY DAMS

N.A.

3. PRINCIPAL SPILLWAY

None

4. OUTLET WORKS

None

5. EMERGENCY SPILLWAY

None

DOWNSTREAM DEVELOPMENT
APPROXIMATE WIDTH OF AFFECTED FLOODPLAIN 0.05 MILES

MILES DOWNSTREAM FROM DAM	DOWNSTREAM DEVELOPMENT												Loss of Life Potential			Economic Loss Potential		
	OCCUPIED HOMES	UNOCCUPIED HOMES	AGRICULTURAL BUILDINGS	INDUSTRIAL BUILDINGS	COMMERCIAL BUILDINGS	SCHOOLS	HOSPITALS	ROADS & BRIDGES	DAMS	OVERHEAD UTILITIES	OTHER DEVELOPMENT (Name)	OTHER DEVELOPMENT (Name)	NONE	1 TO 10	OVER 10	MINIMAL EXPECTED	APPRECIABLE EXPECTED	EXCESSIVE EXPECTED
0 to 1/4													X			X		
1/4 to 1/2													X			X		
1/2 to 3/4													X			X		
3/4 to 1													X			X		
1 to 1-1/4													X			X		
1-1/4 to 1-1/2													X			X		
1-1/2 to 1-3/4													X			X		
1-3/4 to 2													X			X		
OVER 2													X			X		

SKETCH IN DEVELOPMENTS DOWNSTREAM OF THE DAM

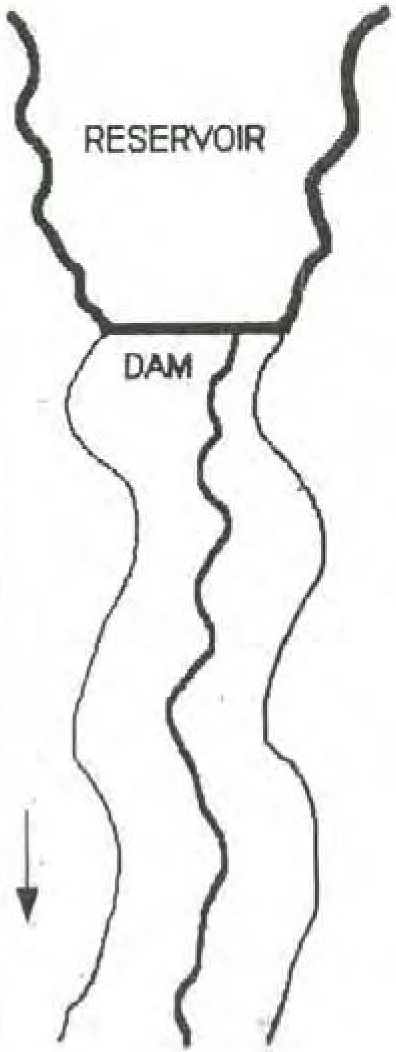

The number of homes, buildings, or other items in the floodplain downstream of the dam should be placed in the appropriate row and column to designate their location.

PROJECT NAME: SIPC B-3 Dam	PROJECT NO.: 08156	DATE: 12/03/08	TIME: 2:30 pm	PHOTOS BY: WBZ

PHOTO DESCRIPTION

Looking East

PHOTO DESCRIPTION

Looking West along North levee

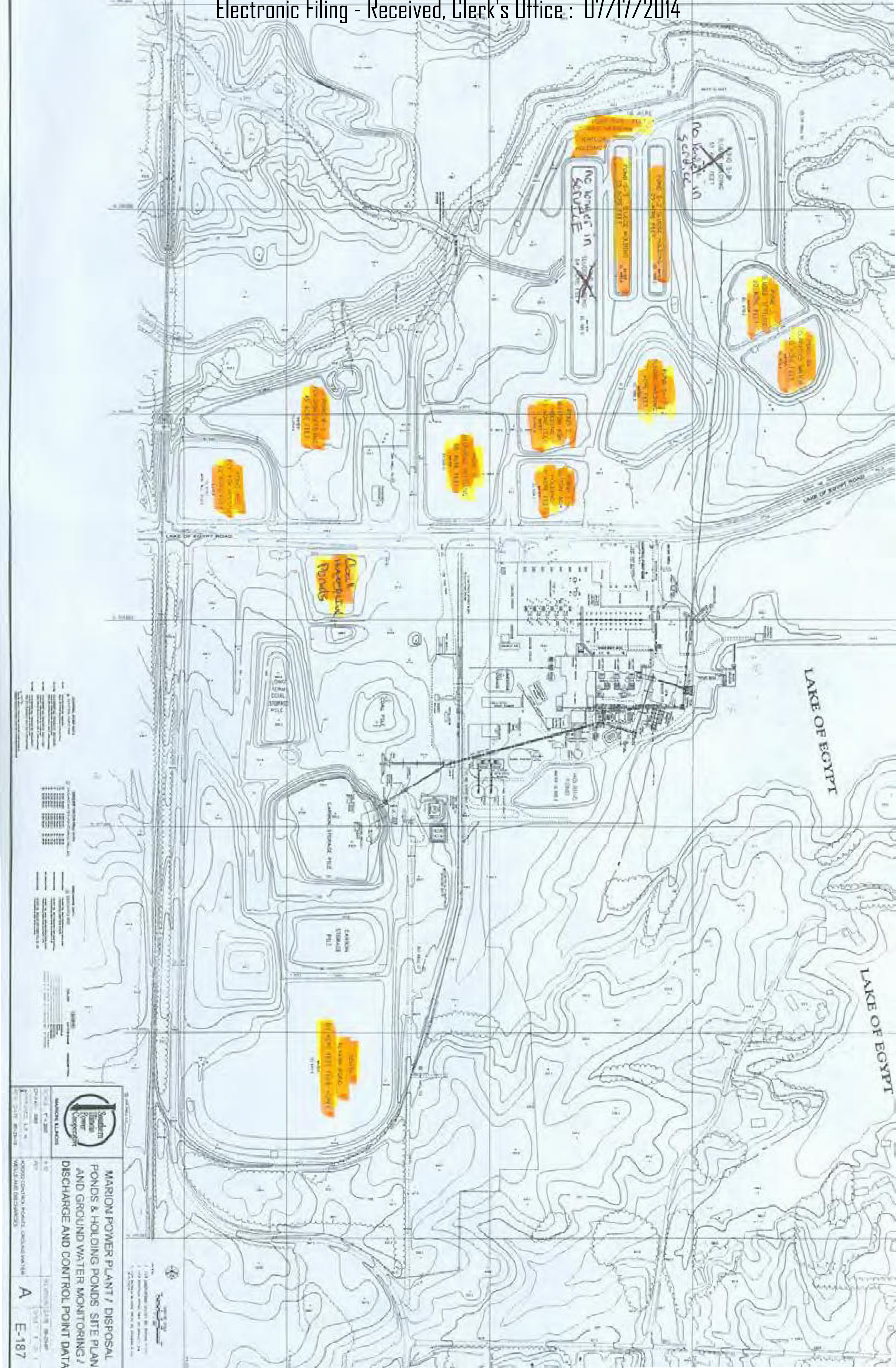
No longer in service
No longer in service
No longer in service
Coal Handling Ponds
LAKE OF EGYPT ROAD
LAKE OF EGYPT ROAD
LAKE OF EGYPT
LAKE OF EGYPT
COAL PILE
CARBON STORAGE PILE
CARBON STORAGE PILE
Southern Illinois Power Cooperative
MARION, ILLINOIS
MARION POWER PLANT / DISPOSAL PONDS & HOLDING PONDS SITE PLAN AND GROUND WATER MONITORING / DISCHARGE AND CONTROL POINT DATA
A
E-187

Illinois Pollution Control Board
R2014-10

T. Barkley: Exhibit K

DMR Data Retrieval

NPDES ID	Permit Name	Perm Feature ID	Limit Set
IL0049191	AMEREN ENERGY GENERATING COMPANY	001	0
IL0049191	AMEREN ENERGY GENERATING COMPANY	001	0
IL0049191	AMEREN ENERGY GENERATING COMPANY	001	0
IL0049191	AMEREN ENERGY GENERATING COMPANY	001	0
IL0049191	AMEREN ENERGY GENERATING COMPANY	001	0
IL0049191	AMEREN ENERGY GENERATING COMPANY	001	0
IL0049191	AMEREN ENERGY GENERATING COMPANY	001	0
IL0049191	AMEREN ENERGY GENERATING COMPANY	001	0
IL0049191	AMEREN ENERGY GENERATING COMPANY	001	0
IL0049191	AMEREN ENERGY GENERATING COMPANY	001	0
IL0049191	AMEREN ENERGY GENERATING COMPANY	001	0
IL0049191	AMEREN ENERGY GENERATING COMPANY	001	0
IL0049191	AMEREN ENERGY GENERATING COMPANY	001	0
IL0049191	AMEREN ENERGY GENERATING COMPANY	001	0
IL0049191	AMEREN ENERGY GENERATING COMPANY	001	0
IL0049191	AMEREN ENERGY GENERATING COMPANY	001	0
IL0049191	AMEREN ENERGY GENERATING COMPANY	001	0
IL0049191	AMEREN ENERGY GENERATING COMPANY	001	0
IL0049191	AMEREN ENERGY GENERATING COMPANY	001	0
IL0049191	AMEREN ENERGY GENERATING COMPANY	001	0
IL0049191	AMEREN ENERGY GENERATING COMPANY	001	0
IL0049191	AMEREN ENERGY GENERATING COMPANY	001	0
IL0049191	AMEREN ENERGY GENERATING COMPANY	001	0
IL0049191	AMEREN ENERGY GENERATING COMPANY	001	0

Parameter Desc	Monitoring Period	Limit Unit Desc	DMR Value
Mercury, total [as Hg]	01/31/2012	Micrograms per Liter	.0099
Mercury, total [as Hg]	02/29/2012	Micrograms per Liter	.02
Mercury, total [as Hg]	03/31/2012	Micrograms per Liter	.017
Mercury, total [as Hg]	04/30/2012	Micrograms per Liter	.01
Mercury, total [as Hg]	05/31/2012	Micrograms per Liter	.0097
Mercury, total [as Hg]	06/30/2012	Micrograms per Liter	.013
Mercury, total [as Hg]	07/31/2012	Micrograms per Liter	.011
Mercury, total [as Hg]	08/31/2012	Micrograms per Liter	.012
Mercury, total [as Hg]	09/30/2012	Micrograms per Liter	.015
Mercury, total [as Hg]	10/31/2012	Micrograms per Liter	.0042
Mercury, total [as Hg]	11/30/2012	Micrograms per Liter	.006
Mercury, total [as Hg]	12/31/2012	Micrograms per Liter	.013
Mercury, total [as Hg]	01/31/2013	Micrograms per Liter	
Mercury, total [as Hg]	02/28/2013	Micrograms per Liter	
Mercury, total [as Hg]	03/31/2013	Micrograms per Liter	
Mercury, total [as Hg]	04/30/2013	Micrograms per Liter	
Mercury, total [as Hg]	05/31/2013	Micrograms per Liter	
Mercury, total [as Hg]	06/30/2013	Micrograms per Liter	
Mercury, total [as Hg]	07/31/2013	Micrograms per Liter	
Mercury, total [as Hg]	08/31/2013	Micrograms per Liter	
Mercury, total [as Hg]	09/30/2013	Micrograms per Liter	
Mercury, total [as Hg]	10/31/2013	Micrograms per Liter	
Mercury, total [as Hg]	11/30/2013	Micrograms per Liter	
Mercury, total [as Hg]	12/31/2013	Micrograms per Liter	

DMR Value Unit Short Desc	DMR Value Type C	NODI Desc
ug/L	C2	
ug/L	C2	
ug/L	C2	
ug/L	C2	
ug/L	C2	
ug/L	C2	
ug/L	C2	
ug/L	C2	
ug/L	C2	
ug/L	C2	
ug/L	C2	
ug/L	C2	
	C2	Conditional Monitoring - Not Required This Period
	C2	Conditional Monitoring - Not Required This Period
	C2	No Discharge
	C2	Conditional Monitoring - Not Required This Period
	C2	Conditional Monitoring - Not Required This Period
	C2	Conditional Monitoring - Not Required This Period
	C2	Conditional Monitoring - Not Required This Period
	C2	Conditional Monitoring - Not Required This Period
	C2	
	C2	
	C2	Conditional Monitoring - Not Required This Period
	C2	

Illinois Pollution Control Board
R2014-10

T. Barkley: Exhibit L

Ameren Energy Generating Company
Newton Power Station
Jasper County, Illinois

National Pollutant Discharge Elimination System (NPDES) Permit Modification Responsiveness Summary

Table of Contents

Agency Permit Decision 2

Pre-hearing Public Outreach 3

Public Hearing 3

Background Information 4

Public Comments and Agency Responses 5
  NPDES Permit Modification Issues 5
  Antidegradation Assessment Issues 6
  Phosphorus Issues 9
  Sulfate Issues 11
  Mercury Issues 12
  TSS Issues 18
  Alternatives to Ash Ponds 20
  Groundwater Monitoring Issues 26
  Issues Outside the Scope of This NPDES Permit Modification 30

Distribution of Responsiveness Summary 31

For Further Information 32

Acronyms and Abbreviations 33

Final January 31 , 2012

ILLINOIS ENVIRONMENTAL PROTECTION AGENCY

Ameren Energy Generating Company
Newton Power Station
Jasper County, Illinois
Modified NPDES Permit
NPDES Permit Number IL 0049191

Agency Permit Decision

On January 31, 2012, the Illinois Environmental Protection Agency (Illinois EPA or IEPA or Agency) issued the modified NPDES permit for Ameren Energy Generating Company, Newton Power Station.

The following modifications have been made to the final permit:

- The outfall 001 flow has been increased from 8.31 MGD to 17.2 MGD due to the proposed addition of wet sluicing from Unit 2. This modification is reflected on page 2 of the permit.
- Phosphorus limits have been added to outfalls A01 and 003 due to the November 12, 2007 approval of the, "Little Wabash River II TMDL." The phosphorus load limits for Outfall 003 were modified since the July 14, 2011 public noticed draft to reflect the DAF and DMF. The new Outfall 003 load limits are 0.125 lbs/day for 30-day Average and 0.734 lbs/day for Daily Maximum.
- Special Condition 21 was added which requires the installation of a continuous flow meter at Outfall 001.
- Special Condition 22 was added which requires the monitoring of various metals at Outfall 001.
- Special Condition 23 was added which requires influent monitoring for Flow, Phosphorus, and TSS.
- Monthly phosphorus monitoring has been added to Outfall 001.
- Special Condition 20 was modified to reflect a name change for a currently used additive.
- Special Condition 4: The sulfate mixing zone designation has been removed from the permit.
- The phosphorus load limits for Outfall 003 have been modified as noted above.
- An annual average mercury limit of 12 ng/L has been added to Outfall 001.
- The requirement for 12 total mercury samples for Outfall 001 previously noted in Special Condition 18 has been changed to monthly sampling.
- Special Condition 26 has been added and requires an investigation to determine what the ash pond's current detention time is and how much available freeboard is present in both the primary and secondary ash ponds.
- Special Condition 25 has been added requiring groundwater monitoring and an assessment of impacts. It also includes requirements if additional impacts to groundwater are occurring.

Pre-Hearing Public Outreach

The public hearing notice, including the NPDES Permit Public Notice/Fact Sheet, was published on July 14, 2011 in the *Newton Press Mentor*. Two successive publications of a public hearing notice were made in the same newspaper on July 21 and 28, 2011. During the week of July 18, 2011, the public hearing notice was also mailed or e-mailed to persons on a public hearing notice service list maintained by the Illinois EPA. The notice was sent to local state legislators, Jasper County and City of Newton officials, and the Illinois EPA Bureau of Water permit public notice mail-out list. The public hearing notice was also posted at the Illinois EPA Springfield Office and on the Illinois EPA website at: http://www.epa.state.il.us/public-notices/2011/npdes-notices.html#ameren-newton

The hearing notice was revised August 16, 2011, updated on the agency web site and re-sent to those on the e-mail list that same day. The revised notice corrected an error in the original notice's text.

Public Hearing

At 6 p.m. August 30, 2011, Illinois EPA Hearing Officer Dean Studer opened the public hearing in the second floor Court Room of the Jasper County Courthouse, Newton, Illinois. After the Hearing Officer's opening statement and hearing panel introductions, Paul Hardiek, Technical Services Superintendent for permittee, Ameren Energy Generating Company, made a statement concerning the permit modification. Brian Cox, Illinois EPA Permit Engineer, explained the draft NPDES permit modification. Members of the audience made comments on the permit modification and asked questions of the hearing panel.

The Hearing Officer closed the public hearing at 7:25 p.m. on August 30, 2011 after reminding the audience of the close of the comment period and hearing record at midnight on September 29, 2011. A transcript of the entire Public Hearing was made and posted on the Illinois EPA web site on September 8, 2011.

Illinois EPA personnel were available before and after the hearing to meet elected officials, news media and concerned citizens. Eleven people, including representatives of the Illinois Chapter of the Sierra Club, the Prairie Rivers Network, the Jasper County Board of Review and Ameren Energy Resources, participated in or attended the hearing.

The public hearing notice, the hearing transcript, the draft and final modified NPDES permits and this responsiveness summary are available on the Illinois EPA website: http://www.epa.state.il.us/public-notices/2011/npdes-notices.html#ameren-newton.

Draft NPDES Permit Background Information

The Illinois EPA Bureau of Water prepared a draft modified National Pollutant Discharge Elimination System (NPDES) permit for the Newton Power Station. The address of the discharger is Ameren Energy Generating Company, 1901 Chouteau Ave (MC-602), P.O. Box 66149, St. Louis, Missouri. The Newton Power Station facility address is 6725 500th St., Newton, Illinois.

The following modifications to the facility's permit were requested by the applicant:

- The secondary ash pond discharge from outfall 001 was proposed to increase from 8.31 MGD to 17.2 MGD due to the addition of fly ash sluice water from Generating Unit 2, the increase of fly ash sluice water from Generating Unit 1, some minor increases to water treatment plant related wastewaters, and some corrections to existing flows due to previous calculation errors. The increased flow from fly ash sluice water is due to the installation of an activated carbon injection (ACI) system which injects halogenated activated carbon into the flue gas stream. This system was required in accordance with Ameren's Multi Pollutant Reduction Agreement with the State of Illinois. The ACI system is used primarily to reduce mercury and sulfur oxides (SOx) concentrations from the flue gas waste stream. In addition, due to the use of a proprietary fuel additive, there are also nitrogen oxides (NOx) reductions in the flue gas. The ACI system was installed on both Generating Units and was required by the Multi-Pollutant Reduction Agreement to become operational by July 2009.

- A revision in Special Condition 20 to reflect a name change for a currently used additive.

Previously, Newton Power Station sold the majority of their fly ash to be used as an additive in the cement industry. The installation of the activated carbon injection system has caused the commingling of fly ash and halogenated activated carbon which has resulted in unmarketable fly ash due to the carbon content.

As a result of the fly ash being unmarketable, Ameren proposed an increase in fly ash sluice water from Generating Unit 1, the addition of fly ash sluice water from Generating Unit 2, and an increase in wastewater sump flows. These flows will discharge to the primary ash settling pond which is tributary to the secondary ash settling pond which ultimately discharges through Outfall 001.

Public Comments and Agency Responses

NPDES Permit Modification:

1. There won't be more ash created at the site; the ash just won't be leaving the site for other uses, correct? I understand the fly ash sluice water increase but can you explain what the wastewater sump discharges are made up of that are going to increase in volume and why they are increasing? Are the wastewater sumps all involved in moving the ash from the plant to the ash pond? Why will those volumes increase?

   Response: No increase is expected in the ash volume generated at the site. The wastewater sump discharge components are listed on page 2 of the permit and include soot blower thermal drains, ash hopper overflow, ash pit sumps, boiler house floor drains, strainer backwash, and other miscellaneous contributory flows. These discharges are routed through a 45,000 gallon capacity oil/water separator before discharge to the ash pond system. The volume increases are related to the activated carbon injection; more water is required now because of the sluicing, and consequently the other flows will also increase slightly.

2. Special Condition 18 says, "Upon modification of the permit, Outfall 001 will be monitored for mercury on a monthly basis till 12 samples have been collected." Since we know practices are changing at the power plant, will those operational changes be in effect at the power plant when this monitoring requirement goes into effect, or are those changes already occurring at the plant? Are we already getting increased ash disposal in the ash pond? When do you anticipate that increased ash disposal will begin? My concern is that the mercury monitoring proposed in Special Condition 18 reflect the worst case scenario when all the fly ash sluices that are proposed are actually being sent to the ash pond.

   Response: The ash sluice from Generating Unit 1 has already increased and the fly ash from Generating Unit 2 may be sluiced to the Ash Pond immediately following the issuance of the modified permit. The modified permit has replaced the draft Special Condition 18 requirement to collect 12 total mercury samples with a monthly monitoring requirement for an indefinite amount of time. Therefore, once the modification becomes effective, the new mercury monitoring requirements become effective and increased volumes of fly ash sluice water may begin to be sent to the ash holding pond from Generating Unit 2 as well as Generating Unit 1. The mercury monitoring will reflect whatever discharge conditions are current at the facility. Therefore, if both generating units are discharging all fly ash sluice water to the ash ponds, then the monitoring will reflect those conditions. Additionally, an annual average mercury limit has been added to Outfall 001 which will be protective of the water quality in Newton Lake.

Antidegradation Assessment

3. The Antidegradation section entitled "Identification of Proposed Pollutant Load Increases or Potential Impacts on Uses" on page 3 of the public notice/fact sheet, states that Ameren had prepared a summary of proposed load increases and that loadings of most of these constituents in the discharge ash pond effluent will increase, but there's no listing of those constituents. Please list the constituents that are anticipated to increase in loading.

Response: The constituent list of proposed load increases in the discharged ash pond effluent is found in supporting documents provided by Ameren and reproduced below:

- ➢ Total Hardness was assumed to be 170mg/L as $CaCO_3$, based on available Newton Power Station laboratory data.

The resulting calculations of the projected Outfall 001 characterization based on the data and assumptions previously described are provided in the following table:

Projected Outfall 001 Discharge Characterization

Constituent	Concentration, ug/L	Mass, pounds/day	Estimated change from existing, pounds/day
Arsenic	6	0.71	0.26
Barium	430	51	18.3
Cadmium	1	0.12	0.04
Chromium	11	1.29	0.47
Lead	3	0.35	0.13
Mercury	<2	<0.2	<0.2
Selenium	<10	<1.2	<0.4
Silver	<10	<1.2	<0.4
Aluminum	2,957	348	126
Antimony	<20	<2.4	<0.9
Beryllium	<5	<0.6	<0.2
Boron	786	92	33
Cobalt	<5	<0.6	<0.2
Copper	<10	<1.2	<0.4
Iron	43	5.1	1.8
Manganese	<10	<1.2	<0.4
Molybdenum	55	6.5	2.3
Nickel	<10	<1.2	<0.4
Vanadium	1	0.12	0.04
Zinc	<10	<1.2	<0.4
Titanium	5	0.59	0.21
Hexavalent Chromium	<5	<0.6	<0.2
Sulfate	120mg/L	14,110	5,100

All samples reported on Form 2C, including the leachate extract, were analyzed in accordance with 40 CFR 136 that were applicable as of the date of analysis. Values listed under the headings "Maximum 30 Day Value" and "Long Term Average Value" were compiled from data required by the existing NPDES permit during the February 2007 – January 2008 period. Mass discharges under these headings were calculated using the appropriate anticipated long-term average flow rates. Rounding of all calculations was performed in accordance with Standard Methods, 19th Edition.

4. The pollutants for which additional loading is expected should be in the documents that are publicly noticed. I understand that the antidegradation assessment addressed boron, sulfate and total suspended solids, but all of the other pollutants for which increases in loading are expected should also have to be in the antidegradation assessment and be publicly noticed.

   Response: The antidegradation review prepared by Illinois EPA staff and included in the public notice/fact sheet document is a summary of the analysis intended to provide pertinent information to the permit writer and the public.

   Illinois EPA staff review proposed increases in pollutant loading and identify the notable parameters involved in antidegradation assessment reviews. Illinois EPA staff focus on the identified pertinent chemical substances for the activity in question (see response to comment #3 of this document for the list of constituents and their concentrations in the discharge from Outfall 001). In this case, the antidegradation assessment review focused on boron, mercury, phosphorus and TSS as these are pertinent effluent constituents. Other substances are found in the ash pond effluent at background concentrations for Illinois waters.

5. The fact sheet includes a statement that the concentrations of most of these substances are predicted to remain at the same level. But Newton Lake is more like a bathtub than the flowing waters of a river. When there is discharge to a lake as opposed to a stream, do you perform modeling to assess whether these pollutants have a potential for accumulating in the sediments or in the algae and other aquatic life in the lake?

   Would Ameren have to submit additional information to you concerning changes in water quality of the discharge to Outfall 002 due to increased concentration of minerals in the water because of evaporation of the cooling source water?

   Given the phosphorus and algal impairments in Newton Lake and the use of lake water for cooling, reasonable potential analyses are needed on phosphorus discharges from outfalls 001 and 002 given the potential for source water phosphorus to become concentrated in the effluent as a result of evaporation during cooling. The agency must perform "reasonable potential" analysis for phosphorus. If a reasonable potential exists for these discharges to cause or contribute to a violation of the phosphorus water quality standard or the state's offensive conditions standard prohibiting algal growth of unnatural origin, then the agency must set phosphorus limits to achieve the water quality standards at these outfalls.

   Response: Newton Lake does not resemble a bathtub that never overflows. In 2011, the lake discharged water over the spillway on 144 days or 39.4% of the year. Given the flow of water into and out of the lake, the evaporation that occurs in the power plant will not cause lake concentrations of substances discharged from the ash pond to exceed water quality standards. Concentrations of substances discharged from the ash pond such as sulfate and boron meet existing and proposed water quality standards at end-of-pipe. The only bioaccumulative substance discharged is mercury, and this only at very low levels (see Response to Comment #22). Boron and sulfate, the two most prevalent substances present in the effluent relative to the other constituents, are very soluble and will not accumulate significantly in organisms or lake sediment. Phosphorus is discussed in the responses to comments #9 through #11 below. Other effluent constituents are present in such low concentrations that sediment will not become contaminated. No modeling has been conducted of the fate and transport of effluent constituents because there is no indication that the effluent has or will cause problems within the lake.

6. The antidegradation assessment says that the subject facility discharges to Newton Lake at a point where there's zero CFS flow existing upstream of the outfall. Later, referring to trace metals, the antidegradation assessment states, "The concentrations of these substances are not significantly different from the background water entering the lake." From where was that background water quality information taken that would be considered comparable in trace metal concentrations?

   Response: The background values were based on un-impacted waters in that area of the state. (Please review the response to comment #3 of this document for the list of constituents in the discharge at Outfall 001 and the concentrations predicted.) Many of the trace metal constituents are below detection and those at higher concentrations are typical of background conditions in Illinois. Background water quality conditions for Newton Lake are the ambient conditions in most streams in Illinois.

7. When do you expect the flue gas desulfurization system to be added at the power plant? Does this permit and its antidegradation analysis reflect the additional pollutant loading that would come from that ash scrubber sludge?

   Response: Illinois EPA has yet to be informed of an exact date that Ameren expects the flue gas desulfurization (FGD) system to be added. The Agency has been informed that the FGD system is still in its planning phase and Ameren does not expect to produce a wastewater discharge from this system. This will be achieved through recycling the wastewater to be reused in the FGD system and landfilling the waste from the treatment of the FGD wastewater. Because the Agency has not yet received a written modification request, at this time the Agency is unable to consider any possible loading increase that may be caused by the installation of a FGD system in the future. However, if the Agency receives a request to add a waste stream from a new FGD system, a separate antidegradation assessment and permit modification will be required at that time.

8. Please explain why this permit is addressing one major outflux of pollutants knowing that in the near future there are going to be more. In terms of antidegradation, that's not looking at the full anticipated impact to Newton Lake; instead, you're handling antidegradation in a way that really doesn't address what is likely to impact the aquatic uses in the long run. Ameren is currently installing wet flue gas desulfurization equipment at the Newton station. This puts IEPA on notice that the waste stream at this site is likely to increase substantially in the near future. Such expansion should be considered now when evaluating waste storage/disposal capacities, designs and costs. A discharge of scrubber sludge would likely result in additional releases of boron, chlorides, sulfates, metals and ammonia.

   Response: Ameren is required to submit a permit modification application if future activities would result in any new pollutant loadings to waters of the state. An antidegradation assessment and water quality based effluent limit analysis will be conducted at that time. The Agency has not received notification that there will be any additional pollutant loading attributed to the FGD system. Furthermore, Ameren has stated that they currently do not anticipate any new pollutant loading to Newton Lake from the installation of the FGD system. Therefore, the Agency can only address the situation as it has been presented. (Please also see Response to Comment #7.)

Phosphorus Issues

9. How is the phosphorus monitoring proposed in the permit consistent with the TMDL for Newton Lake that says there needs to be a 61 percent reduction in loading to the lake? Are you asking Ameren to contribute to that reduction in phosphorus loading to the lake? Will the permit as written help Ameren be a part of the solution to the phosphorus problems in the lake?

   Response: Ameren provided data that the fly ash increase will not increase the phosphorus loading from the discharge. It is not the Agency's intent to require Ameren to remove phosphorus from Newton Lake. Therefore, the influent and effluent monitoring requirements will allow the Agency to determine if there is any phosphorus loading that can be attributed to something other than the sanitary wastewater and background concentrations.

   In addition, permit limits for phosphorus have been added to the two outfalls containing treated sanitary wastewater. Special Condition 24 provides a schedule of compliance for phosphorus limitations from the sewage treatment plant discharges. The phosphorus limitations that were included in this modification are set at the Title 35 IAC 304.123 standards of 1 mg/L for the 30-day average and 2.0 mg/L for the daily maximum. The load limits in the permit are more stringent than the waste load allocations provided in the TMDL. Therefore, the phosphorus limits on Outfalls A01 and 003 will require Ameren to discharge even less phosphorus than the waste load allocations in the TMDL. Currently there is not enough information available to limit phosphorus from Outfall 001. The additional monitoring requirements will allow the Agency to assess Ameren's claims that the phosphorus loading will not be increased due to the additional fly ash sluice water.

10. The TMDL assigns a phosphorus waste load allocation to this facility. The water quality standard for phosphorus at Newton Lake is 0.05 milligrams per liter, but the effluent limit applied is a 30-day average of 1 milligram per liter. Has an evaluation been done to determine whether this effluent limitation would allow for that lake water quality standard to be met? Was the TMDL done using that 0.05 mg/L water quality standard? Even if Ameren meets this effluent limit, won't they be further exacerbating water quality degradation?

    The phosphorus water quality standard applicable to lakes is 0.05 mg/L. *35 IAC 302.205*. Although the permit contains effluent limits for phosphorus discharges from outfalls A01 and 003, these limits are based on wasteload allocations assigned by the TMDL for the Little Wabash River. Upon review of the TMDL, we cannot determine whether the wasteload allocations were established at levels necessary to attain and maintain the phosphorus water quality standard for lakes in accordance with 40 CFR 130.7(c). Please provide evidence that the phosphorus wasteload allocation (and permit limit) was established at levels necessary to attain the applicable phosphorus water quality standard.

    The agency must perform "reasonable potential" analysis for phosphorus. If a reasonable potential exists for these discharges to cause or contribute to a violation of the phosphorus water quality standard or the state's offensive conditions standard prohibiting algal growth of unnatural origin, then the agency must set phosphorus limits to achieve the water quality standards at these outfalls.

    Response: Illinois EPA typically bases TMDL allocations on permit limits. Because there were no permit limits for phosphorus in Ameren's sanitary effluent, an estimated load based on literature values of treated sanitary waste was used. The phosphorus water quality standard for lakes was also considered in the TMDL study, however, the TMDL does not require the power plant effluents to meet the lake phosphorus water quality standard at end-of-pipe or, in fact, to dictate any phosphorus reduction at all.

    Given the small component of lake phosphorus originating in the effluents, complete phosphorus removal from the effluents could not bring the lake water phosphorus concentration down to the water quality standard for Illinois lakes. Conversely, the TMDL states, "The largest potential sources of pollutant loading in the watershed are agricultural practices." The TMDL continues to provide BMPs for reducing pollutants contributed by agricultural practices. Placing phosphorus limits of 1.0 mg/L on the two sanitary wastewater discharges is in addition to any waste load allocation of the TMDL because the TMDL does not dictate any reduction of phosphorus from these effluents. The TMDL indicates that the effluents are not significant contributors of phosphorus to the lake and are not listed as a cause or contributing factor of the algae impairment noted on the 303(d) List. Ameren contributes less than 1% of the phosphorus load to Lake Newton based on the Illinois EPA's TMDL calculations.

11. Do you know what the current phosphorus concentrations are from outfalls A01 and 003 [from sewage treatment plants #2 and #1]?

    Response: Ameren was not required to monitor phosphorus as part of the previous permit. We have several samples that were submitted as part of the application for a previous NPDES renewal, but there are not many data points. Under this modification, Outfalls A01 and 003 have phosphorus monitoring requirements that will become effective immediately following the issuance of the modified permit. Additionally, Outfalls A01 and 003 have phosphorus limitations established that will be applicable upon completion of the compliance schedule provided in Special Condition 24.

Sulfate Issues

12. What is the applicable water quality standard for sulfate in Newton Lake (page 6 of the permit does not list a load limit)? What's the water quality standard that needs to be met in the lake? You must have calculated it because Special Condition 4 identifies a mixing zone for sulfate.

    Response: Using average hardness (124.6 mg/L) from the Illinois EPA sampling on Newton Lake and average chloride (24.77 mg/L) from a sampling station representing similar watershed characteristics on the Little Wabash River (AWQMN Station C-21 at Effingham) because chloride data was not collected on Newton Lake, the sulfate standard in Newton Lake under these best available average water quality conditions is 1304 mg/L.

    Since the predicted ash pond effluent concentration for sulfate is 120 mg/L once Unit 2 fly ash sluice water is discharged to the ash pond, there is no reasonable potential to exceed the water quality standard in the ash pond effluent. No mixing zone is required and the sulfate mixing zone designation has been removed from the permit. The previous designation of a sulfate mixing zone was made when the sulfate water quality standard was 500 mg/L and the differential between the standard and the effluent concentration was less pronounced.

    Please note that there is a boron mixing zone that also may no longer be needed as we anticipate the Illinois Pollution Control Board will adopt a higher limitation/standard than the current standard. At that time, Special Condition 4 of the permit could be further modified to remove mention of mixing zones where it is no longer needed.

Mercury Issues

13. We're concerned about mercury at very low levels. The antidegradation statement says that mercury is expected to undergo a decrease in loading. I understand that you've looked at some [research] papers but have you looked specifically at the mercury discharges here? For example, what is the concentration of mercury currently coming out of the ash ponds and what is the future concentration since we know the volume is going up? Please provide the numbers/calculations that showed that the loading would be going down.

    Response: The final modified permit now requires monitoring of mercury at six outfalls (001, 004, 007, 008, 009, 010) using the low level methodology, method 1631E, so we will be able to determine future mercury concentrations in the effluent discharged. However, since the previous permit did not require that particular monitoring, we do not yet have data for the suggested comparison. The future concentration of mercury in the ash pond effluent is predicted to remain the same as it is now. (See the response to comment #19 for recent mercury results from the ash pond discharge.) Increasing the volume of wastewater in the pond will not necessarily influence concentration. "Loading" is different than concentration; loading is dependent on effluent volume as well as contaminant concentration. Loading of mercury from the ash pond effluent is predicted to approximately double due to the increase in effluent volume by adding sluice from Generating Unit 2. However, as explained in the response to comment #22, overall loading of mercury to Newton Lake is expected to decrease with the advent of mercury removal from air emissions.

14. The Agency must identify and quantify the proposed load increases and the impacts of those increases in accordance with 35 IAC 302.105(f). The public notice states that mercury loadings are expected to decrease, despite a more than doubling of sluice water discharges, because mercury in the ash will be absorbed by activated carbon. When asked at hearing for the basis of this claim, IEPA stated that it relied on reports provided by Ameren prepared by the Electric Power Research Institute and US EPA, but admitted that it has never analyzed the mercury content in discharges from other coal-fired power plants in Illinois that employ activated carbon injection. Coal-fired generating facilities using activated carbon injection and ash ponds are present in the Midwest and should be assessed for on-the-ground performance of ash and associated pollutant particles to help predict expectations of settling pond performance at the Newton facility. The agency needs to properly quantify expected loadings of mercury by evaluating data from one or more of these sites.

    Response: Reduction of mercury in power plant air emissions is considered a large step forward in remediating mercury contamination in the nation's waters. U.S.EPA approved the method of activated carbon injection that Ameren will employ and is already utilizing on another unit at the Newton Station to accomplish the air emission reductions. Studies were conducted at the national level, such as those cited in the antidegradation assessment review produced by Illinois EPA, that indicate the mercury will stay sorbed to the carbon and that this carbon will settle. The Electric Power Research Institute's publication Activated Carbon Injection: Effect on Simulated Fly Ash Sluice Water, relates the results of experiments done with simulated ash sluice water after activated carbon treatment and settling. At page 2-3, the publication states that "the low magnitude of the concentrations would suggest that mercury captured from the flue gas by the carbon is generally stable and does not leach out." Also, "the carbon does not have a significant effect on the concentration of TSS in the fly ash sluice water" (page 2-2).

New technologies rely on laboratory experiments to judge whether they may be effective. When the technology is applied at full scale, measurements may then be taken to determine the actual, as opposed to predicted, effectiveness. In the process of developing new pollution control technologies a determination may be made that a reasonable outcome is likely. In this event, governmental bodies approve the practice and the technology is installed. At this time there has not been an extensive record created of the mercury concentrations in ash pond effluents because of the recent advent of the method. There are no facilities in Illinois with a track record of use of this technology that provides the longer-term data that Illinois EPA would need to evaluate the effectiveness of the method at this time. However, mercury limits have been added to Outfall 001 due to a reasonable potential to exceed water quality standards. These limits will require the discharge to meet the human health water quality standard found at 35 IAC Part 302.208(f). In addition, as explained in the response to comment #22, overall loading of mercury to Newton Lake is expected to decrease with the advent of mercury removal from air emissions.

15. Could you provide us with the U.S.EPA and Electric Power Research Institute documents indicating that the mercury would stay adsorbed to the activated carbon that you reviewed and relied on as part of your conclusions that the mercury loading was going to decrease?

    Response: These documents are under copyright protection so cannot be provided directly by the Illinois EPA. The document citations are: Electric Power Research Institute's "Mercury Control Technology" March 31, 2008 (Product ID: 1014172) and U.S.EPA's "Characterization of Mercury Enriched Coal Combustion Residues from Electric Utilities Using Enhanced Mercury Sorbants for Mercury Control," January 2006 (EPA/600/R-06/008). The website page for the U.S.EPA document is: http://www.epa.gov/nrmrl/pubs/600r06008/600r06008.pdf The Electric Power Research Institute document may be obtained through inter-library loan. It is not available online as a free download.

16. Is the mercury 1631 test a water column test?

    Response: Yes. Grab samples are obtained from the water to be tested and no filtering is allowed resulting in a total mercury result.

17. Can you describe for me how this activated carbon looks? Illinois EPA's Bob Mosher testified that it's going to settle in the ash pond, but I think of activated carbon as fine particles, so I'm trying to understand how it's going to just settle in the ash pond and not be washed out into Newton Lake.

    Concerning the mercury, the fly ash and the activated carbon particles going into the lake: During the antidegradation assessment evaluation, why did you assume that there will be no increase in loading of mercury into the lake? Even though there will be some settling of the activated carbon in the ash pond, there's also bound to be some of the activated carbon released into Newton Lake, carrying with it the adsorbed mercury.

    Response: The halogenated activated carbon is a powder injected into the flue gas and consequently becomes mixed with the fly ash. It is collected by the air emissions control equipment with the fly ash; it is not a separate waste product.

    The Electric Power Research Institute's publication Activated Carbon Injection: Effect on Simulated Fly Ash Sluice Water relates the results of experiments done with simulated ash sluice water after activated carbon treatment and settling. The results of a settling experiment comparing simulated fly ash sluice water containing activated carbon with sluice water containing ordinary fly ash indicate after 12 hours of settling no visible carbon was present in the sample and the total suspended solids content was well within regulatory requirements (page 2-1). The Newton Plant ash pond provides much more than 12 hours of settling time. According to this document, the activated carbon appears as a black suspended substance until it settles.

    While mercury loading from the ash pond may increase slightly, mercury being deposited in Newton Lake and its watershed will decrease due to the removal of mercury from air emissions at the Newton station and from other power plants subject to new mercury air emissions controls. (See response to comment #22.)

18. Aside from reviewing those two documents that point to most of [the mercury and activated carbon] staying in the ash pond, was there any additional investigation done such as looking at sister facilities or other facilities in the state or out of state that have used activated carbon and ash sluice in ash pond systems?

Response: Mercury air emission controls are very recent additions to power plant pollution reduction facilities. The Illinois EPA knows of no other examples of power plants in Illinois that have been removing mercury from air emissions for a long enough period to judge whether the practice is having an impact on mercury concentrations in ash pond discharges.

19. We note that Ameren's claim that existing average effluent mercury equals 6.1 ng/L is not supported by the discharge monitoring records. According to information found in US EPA's Enforcement and Compliance History Online (ECHO) database, Ameren's Newton mercury discharges from outfall 001 have been increasing steadily since 2009 when the facility began using activated carbon injection. In the first quarter of 2011, mercury effluent measured 17.8 ng/L, and in the second quarter of 2011, it was 18 ng/L.

    Response: Illinois EPA has discussed the effluent mercury data with Ameren representatives. Because mercury is a difficult parameter to monitor due to the very low part per trillion level of detection with inherent susceptibility to contamination of the sample and the difficult laboratory test involved, mercury data sets often contain aberrant sample results and are difficult to interpret. Ameren stated that they reviewed the past data and found no abnormalities.

    The mercury sample for the ash pond effluent for November 2011 is again very low, 3.42 ng/L. Ameren stated that they also examined the effluent using a microscope and saw no evidence of carbon particles. Even so, the Agency has added an annual average mercury limit of 12 ng/L to Outfall 001, based on the monitoring results indicated above. Illinois EPA will follow future results at this facility and other ash ponds receiving activated carbon mercury sorbent to track trends. If future results indicate that elevated mercury concentrations are present, then further investigation will be needed to determine the exact cause of the mercury increase.

20. Given the high concentrations of mercury reported in discharges from Outfall 001, the twelve months of mercury monitoring required by Special Condition 18 are not sufficient.

    Response: The modified permit has replaced the draft Special Condition 18 requirement to collect 12 total mercury samples with a monthly monitoring requirement for an indefinite period of time. In addition, the modified permit includes an annual average effluent limit of 12 ng/L for mercury at Outfall 001.

21. Is any mercury monitoring of the sediment of Newton Lake being done?

    Response: Illinois EPA sampled Newton Lake sediment for mercury on two occasions. On August 14, 2001, samples were collected at three locations on the lake. The mercury content in each of these sediment samples was below the analytical detection limit of 0.01

mg/kg. On March 4, 2009, samples were collected at two locations on the lake. One of these had a result of 0.06 mg/kg mercury and the other 0.03 mg/kg mercury. An Illinois EPA publication entitled Sediment Classification for Illinois Inland Lakes (1996 Update) by Jeffery D. Mitzelfelt, September 1996, gives a relative classification scheme for metals and organic substances in lake sediments. Ranges of sediment concentration for Low, Normal, Elevated and Highly Elevated categories are given. The two samples where mercury was measured in Newton Lake sediment are both in the "Normal" category.

22. Mercury accumulates in the environment, and especially in fish tissue, over time. The body burden of mercury in Newton Lake fish is not currently known. However, it must be assumed that additional mercury will accumulate in those fish, posing further risk to those consuming fish flesh. We can also assume there is a buildup of mercury sorbed to sediment particles that have settled to the lake bottom. When bottom sediments are stirred, particles containing some degree of attached pollutants are released into the water column where they are available for uptake by fish. An analysis of the mercury found in the sediment in the lake would aid in determining the extent to which additional loadings of mercury to the lake from the power plant should be allowed. Additionally, temperature loading to Newton Lake may contribute to periods of anoxic zones in the lake, facilitating the methylation or release of mercury available to aquatic organisms such as fish.

IEPA must perform a reasonable potential analysis on mercury discharges and determine whether there is a reasonable potential for Ameren's proposed discharge to contribute to the fish consumption use impairment. The modified permit should set a limit for mercury discharges from Outfall 001 based on the reasonable potential analysis.

Response: The goal behind adoption of air emission regulations for mercury removal was to stop mercury from entering the atmosphere where it would then be transported and eventually deposited on the surface where it could contaminate lakes and rivers. Newton Lake along with all other water bodies will benefit from the reduction in mercury emissions.

The information available supports the determination that the net loading of mercury to Newton Lake will decrease as a result of the mercury air emission limits even if the concentration in the ash pond increases slightly. The mercury contribution from the ash pond is now and is predicted to stay very low. Assuming a mercury concentration of 5 ng/L, which is the approximate current average, and the current ash pond discharge of 8.31 MGD, 0.0035 pounds per day of mercury is discharged (0.126 pounds per year). If this concentration is maintained with the expansion of the ash pond discharge to 17.2 MGD, the daily mercury discharge is 0.0007 pounds per day or 0.225 pounds per year. If the mercury concentration increases to the maximum allowable under the human health water quality standard of 12 ng/L, the daily mercury discharge will be 0.0017 pounds per day or 0.62 pounds per year. The maximum increase of less than one-half pound per year should be more than offset by the reduction in atmospheric mercury being deposited on the lake and its watershed.

The USGS and Indiana Department of Environmental Management published a document in December 2006 entitled Monitoring Program for Mercury in Precipitation in Indiana: Data Summary for 2001- 2005. This study concluded that the average precipitation event mercury deposition in samplers located at five sites in Indiana was 12 micrograms per square meter per year. The sites were not associated with coal fired power plants where we would expect mercury deposition to be greater. Also, dry atmospheric mercury deposition was not measured in this study. These two factors mean that simply measuring wet deposition at ambient sites will underestimate mercury loading to water bodies from the atmosphere. If the Indiana study rate of mercury deposition is applied to Newton Lake and its watershed, 3.47 pounds per year of atmospheric mercury falls on the 32,420 acres of the lake and its watershed. A reduction of only 17% of this atmospheric mercury contribution would more than offset the maximum contribution of the ash pond increase if atmospheric mercury is the same at the Newton Station as it is across Indiana. The activated carbon injection process itself is anticipated to remove approximately 90% of the mercury from the Newton Station flue gas, theoretically reducing considerably the nearby atmospheric mercury concentrations and mercury deposition to the watershed.

Data do not exist to allow a site-specific comparison of “before” and “after” mercury deposition for this plant. The anticipated reduction in atmospheric mercury brought about by air emission controls will reduce mercury input into Newton Lake and bring about mercury reductions in sediment, water and fish flesh. Newton Lake should not receive an overall increase in mercury as a result of the increased discharge to the ash pond from the mercury air emissions control project and therefore the fish in the lake should not experience an increase in mercury body burden from the ash pond effluent contribution. Sediment analysis measures mercury concentrations resulting from the history of mercury input to the lake but will not provide much useful information for the future. Monitoring of fish flesh will be the most effective measure of the success of new mercury controls. Illinois EPA, in cooperation with IDNR and the IDPH, will continue to measure mercury in Newton Lake fish.

23. Have fish tissue samples from Newton Lake been collected and analyzed for mercury or selenium? If not, are there plans to do so?

A finding that the facility is discharging on average below the applicable human health water quality criterion of 12 ng/L is an insufficient basis, standing alone, to conclude that the discharge will not cause or contribute to the fish consumption use impairment, since an assessment of impact on fish tissue concentrations is also necessary.

Response: Fish flesh analysis data for Newton Lake from 1985 to the present includes only 2 samples tested for mercury. Each sample was the composite of the fillets of 5 Largemouth Bass collected in May of 2003: one of these composites was of smaller bass and had a mercury concentration of 0.12 mg/kg; the other composite was made up of larger bass and had a mercury concentration of 0.27 mg/kg.

Given the protocol for establishing fish advisories, the existing data for Newton Lake led to a predator fish consumption advisory of one meal per week for the most sensitive populations (small children and women of childbearing age). This is the advisory that is in effect in all Illinois waters unless site-specific data indicates that a more stringent fish advisory is appropriate. The Illinois EPA has requested mercury analysis of Largemouth and White Bass caught in 2005 and has placed Newton Lake on the list of Illinois lakes which will undergo additional fish sampling in 2012. If new data indicate that a more stringent advisory is mandated this will be accomplished through the usual cooperative process among Illinois EPA, Illinois DNR and the Illinois Department of Public Health.

TSS Issues:

24. In NPDES permits for some mine facilities, we'll often see a special condition that requires that the sedimentation ponds be maintained for a certain capacity so that the actual function of the treatment is realized. I didn't see anything in this permit that says that these ash ponds have to be maintained so they actually are getting that settling treatment. If more ash is going to these ponds, they may fill up faster. If there's more sediment and less water, they're more susceptible to being physically disturbed (stirred up). Has the Agency considered any requirements of Ameren to maintain their ponds in a certain way [to maintain the settling capacity and the retention time]?

    Ameren should be required to reexamine the findings or assumptions made 30 plus years ago regarding loss of treatment capacity of the ash settling pond due to sedimentation, buildup of pollutants in bottom sediments, change in residence time, and changes in flow and discharge rates of upstream contributing stream segments. Changes in the watershed due to land use changes and the potential increase in runoff should also be considered. These factors must be reexamined now, before any increase is permitted, rather than waiting to address these issues in a 2012 renewal. Based on this requested reexamination, the permit should include a special condition specifying how discharges to and from the ash pond should be managed to maximize the settling capacity of the pond.

Response: The original detention time for the holding ponds was approximately 361 days. As noted in the response to comment #17, 12 hours of settling time is expected to be sufficient to meet regulatory requirements for suspended solids. If the treatment ponds were no longer effective due to reduced capacity, there would be a rise in TSS concentrations in the effluent. However, there has been no such rise. Even so, the Agency has added a special condition requiring Ameren to submit a report identifying the average detention time in the ash pond system after both units begin discharging all fly ash sluice water. In addition, this condition will require Ameren to determine the average freeboard in the primary ash pond and in the secondary ash pond.

25. The antidegradation assessment states that, "Based on influent and effluent monitoring, Ameren determined that they had a net removal of total suspended solids for lake water that was used at the facility and passed through the ash pond and polishing pond. The analysis also determined that increased flow will continue to have a net removal of total suspended solids and that total suspended solids loading will not increase due to this increased discharge." Please expand on that.

Newton Lake is impaired for total suspended solids. Is the permit limit set so that there should also be a reduced concentration of the total suspended solids?

The state's offensive conditions standard prohibits discharges that cause or contribute to turbidity of other than natural origin. *35 IAC 302.203*. Newton Lake is already impaired by total suspended solids (TSS). An analysis of the reasonable potential for TSS discharges to cause or contribute to a violation of the narrative standard is needed, and if such potential found, the final permit must contain a water quality based effluent limit for TSS. Ameren erroneously concludes that because TSS concentrations in the effluent will be less than TSS concentrations in the source water, no reductions or offsets of TSS are required. But the concentration of TSS in the source water is irrelevant to the question of whether the discharge will comply with the narrative water quality standard. The only relevant question is whether TSS in the effluent will cause or contribute to a violation of the narrative standard by causing or contributing to turbidity of other than natural origin.

Newton Lake is already impaired by excess TSS. Adding more TSS by more than doubling the fly ash sluice water flow to the ash pond creates the need for a reasonable potential analysis and water quality based effluent limits where such potential is found. The agency must perform "reasonable potential" analysis for TSS and set appropriate effluent limits.

Response: The permit limit for TSS is 30 milligrams per liter for the 30-day average and 50 milligrams per liter for the daily maximum. These limits are site specific limits found at 35 IAC Part 304.216.

Studies conducted by Ameren of Newton Lake water and ash pond effluent TSS concentrations show that the ash pond consistently removes TSS from the lake water. Lake water acquires TSS from the watershed in the form of soil particles and also internally generates TSS in algae growth. The Ameren plant takes in lake water for use in ash sluicing and this lake water ends up in the ash pond where the TSS settles. On average, the water discharged back to the lake in the ash pond effluent has less TSS than the incoming lake water. On an annual basis, the TSS removed by the ash pond is estimated to be 35,000 pounds per year. When Generating Unit 2 begins sluicing ash to the ash pond, the amount of lake water used for this purpose will increase and the amount of TSS removed from the lake will increase to an estimated 73,000 pounds per year. The ash pond outfall has the same concentration limits with the addition of the Unit 2 ash. Therefore, the TSS loading in the Outfall 001 effluent will increase. However, taking into consideration the reduced TSS concentration from influent to effluent, the net loading of TSS to the lake will decrease.

The narrative water quality standard at 35 IAC 302.203 is usually based on a visual interpretation of offensive conditions. In the case of the Newton Power Station ash pond discharge, this visual determination of compliance with the narrative water quality standard involves a comparison of the color or turbidity (or any of the other offensive conditions listed in the standard) of the ash pond effluent vs. that of the lake receiving the discharge. The question becomes, is the effluent notably different in color or turbidity than the lake? Illinois EPA has evaluated Newton Lake for the Illinois Integrated Water Quality Report and 303(d) List for the past several biannual periods and has not noted an offensive condition. Illinois EPA is unaware of complaints by any of the thousands of visitors to the lake each year that the ash pond discharge constitutes an offensive condition under this regulation. The Illinois EPA Champaign Regional Office facility inspector familiar with the site states that no observations of offensive conditions of the discharge were noted during three inspections. Given the conclusion of the TSS studies conducted by the plant showing a net reduction in TSS in the ash pond compared to lake concentrations, the lack of a finding of an offensive condition is understandable. If no violation of the narrative standard is observed, no water quality based TSS permit limits are justified.

Alternatives to Ash Ponds

26. What is the anticipated life of the power station? When evaluating different ways of treating the ash under the antidegradation assessment, what time frame was Ameren station considering? Are we looking at ten more years of operation, 30 more years? Because that makes a difference in which of those alternatives might be economically feasible.

Response: The economic analysis considered the on-site landfill option would have a lifetime of 7.5 years. Ameren has estimated that the ash impoundment will be a viable treatment option for more than 20 years. Even if the power station's lifetime were only 7.5 years the wet sluicing option is still considered the most economically reasonable option for Ameren. The anticipated life of the power plant is greater than 7.5 years. The longer the power plant operates, the more reasonable the wet sluicing disposal option becomes.

27. It seems that some of the assumptions of the antidegradation assessment were that there were previous markets for the ash material and now, because of the increased metals from the activated carbon injection system, that ash is now considered unmarketable. What previous markets existed for the ash material and what attempts were made to market the currently produced ash with higher metals concentrations? I would argue that those are things that should be in the antidegradation assessment because those are assumptions that much of the rest of the antidegradation assessment were based on.

    Ameren has submitted an antidegradation assessment that is deficient in a number of respects. First, Ameren asserts that fly ash will "no longer be marketable due to carbon inclusions and must be disposed of on-site." Please provide evidence of Ameren's reuse or sales of ash prior to beginning activated carbon injection and provide evidence that those contracts are no longer in place and feasible, necessitating additional disposal capacities.

    Response: The installation of the activated carbon injection system has caused the commingling of fly ash and activated carbon. Prior to injection of activated carbon for mercury control at the Newton Power Station, nearly all of the fly ash from the two generating units was beneficially used for the production of cement. Concrete is composed of cement, water, aggregate, and air. Activated carbon scavenges the air from the concrete and this results in undesirable changes in the concrete and effectively renders fly ash containing activated carbon useless as a cement additive. The Agency has taken Ameren at their word that the fly ash is no longer marketable; other facilities have made similar claims.

    Ameren evaluated other beneficial use opportunities for the Newton Power Station fly ash that is considered to be a "lower-quality" than other fly ash that does not contain activated carbon. Currently, there are very few opportunities to use Newton Power Station fly ash as flowable fill material. Ameren continues to seek beneficial uses for Newton Power Station fly ash. If Ameren had the option to sell the fly ash rather than spend money to dispose of it, we presume they would have chosen that option.

28. While we recognize and applaud the additional air pollution controls employed by Newton Power Station, it is inappropriate that the pollutants being removed from air emissions are simply being moved to water. In addition to the threats from the buildup of mercury concentrations in fish flesh, power plant waste in the form of fly ash, bottom ash and activated mercury sorbent contains concentrated levels of arsenic, chromium and cadmium that can damage nervous systems and other organs, especially of children.

    In many locations nationwide, these wastes have degraded public ground- and surface waters adversely impacting consumptive, agricultural, and industrial uses. Studies have also documented multiple developmental, physiological and behavioral abnormalities in many species of amphibians inhabiting wetlands near coal ash disposal sites and toxicity to fish. This is the perfect opportunity for Ameren to retire its wet ash ponds at Newton Lake and to invest in both clean air and clean water technology by disposing of its waste in a lined dry ash landfill. Ameren has already demonstrated the feasibility of this option at its Coffeen power station; why is it not being proposed here? Why is the coal ash not being handled as dry material?

Response: Concentrations of metals, including those mentioned in this comment, meet water quality standards in the ash pond effluent and in Newton Lake. With one exception, there is no exposure to metals or other harmful substances at Newton Lake that would adversely impact aquatic life, wildlife, human health, agricultural or industrial uses. Mercury exposure, in the form of accumulation in fish flesh, occurs at Newton Lake and results in the same fish consumption advisory as is present in all waters of the State, although some other waters have an even more stringent advisory. (Please see the Response to Comment #23.) Ameren is not retiring the ash pond and building additional landfill capacity for future ash disposal because it has found that it is financially infeasible to do so. (Please see the Responses to Comments #30 and #31.)

29. Isn't there already a landfill out there?

Response: Yes, there is a landfill unit on-site accepting the ash but it is already near capacity. Currently Ameren is disposing of the ash in that landfill unit with the expectation that this modification will be approved. Since the landfill unit has limited remaining capacity, Ameren needed to find an alternative for ash disposal. An expansion of the existing, active landfill unit was one of the alternatives explored by Ameren.

30. Ameren had provided an affordability analysis of the fly ash landfill alternative using the USEPA Economic Guidance for Water Quality Standards. Kim Knowles at Prairie Rivers has reviewed those documents. Based on Ameren's own worksheets, it appears to us that they have the liquidity, solvency and leverage to finance a dry ash landfill.

Illinois' antidegradation rules prohibit the lowering of water quality without a showing that the lowering of water quality is necessary to accommodate important economic or social development. *35 IAC 302.105 (c)(1).* A showing of necessity requires a demonstration that protection of existing water quality is not technically or economically feasible. *Des Plaines River Watershed Alliance v. Illinois EPA and Village of New Lenox*, PCB no. 04-88 (April 19, 2007) ("*New Lenox*") at *99. The analysis must demonstrate that all technically and economically reasonable alternatives to avoid or minimize the extent of the proposed increase in pollutant loading have been incorporated into the proposed expansion. *New Lenox at *98.* The Illinois Pollution Control Board has directed the IEPA to apply US EPA's Interim Economic Guidance for Water Quality Standards in making a determination as to what is economically reasonable. The guidance provides a method by which to conduct affordability analyses on treatment alternatives.

...[T]he analysis failed to consider a reasonable range of alternatives. Ameren considered just three options, 1) increasing the discharge to the existing ash pond treatment system, 2) a wetting head system and 3) dry ash landfills. According to US EPA guidance for wastewater discharges from coal combustion residual (CCR) impoundments, ash pond treatment systems do not effectively remove soluble metals. "Pollutants such as selenium, boron, and magnesium, are present [in coal combustion residual] mostly in soluble form and are not effectively and reliably removed by wastewater settling ponds. For metals present in both soluble and particulate forms (such as mercury), the settling pond will not effectively remove the dissolved fraction. Technologies more advanced than settling ponds are available and more effective at removing both soluble and particulate forms of metals, and for removing other pollutants such as nitrogen compounds and total dissolved solids." *Technology-based Effluent Limits Flue Gas Desulfurization (FGD) Wastewater at Steam Electric Facilities,* Memo of James Hanlon, EPA Director Wastewater Management (June 7, 2010).

Why was there was no cost estimate provided for the option to remove metals through microfiltration, demineralization or reverse osmosis treatment? Were those treatments options eliminated because they weren't effective or useful for what was being proposed to be removed?

Alternative technologies discussed in the EPA guidance include chemical precipitation, biological treatment, and vapor-compression evaporation. IEPA should require Ameren to evaluate both the economic and technical feasibility of employing these additional treatment measures in order to minimize increased mercury discharges, discharges of the bioaccumulative selenium, and other heavy metals and salts. Given the mercury fish consumption impairment in Newton Lake, it is imperative that reductions in heavy metal pollution be seriously addressed.

...Ameren's antidegradation alternatives analysis examined the affordability of just one alternative, a dry ash landfill, and then failed to show that the landfill alternative is not economically feasible. To the contrary, it appears that the landfill alternative is both technically and economically feasible, rendering the increased pollutant loadings to Newton Lake unnecessary. In fact, a dry landfill for the storage and disposal of coal combustion residuals was deemed both technically feasible and economically reasonable at Ameren's Coffeen Power Station.

Response: The response to comment #22 provides an explanation of how mercury will be reduced in Newton Lake. Metals concentrations in the ash pond effluent are low. If the proposed new boron water quality standards are considered, all metals meet the lowest available water quality standard in the effluent before mixing. Using the listed treatment methods to further lower the ash pond metals concentrations is not necessary or practical. The antidegradation alternatives analysis concentrated on options that deal with the overall method of handling ash, specifically, whether the facility should continue to use dry ash handling methods as opposed to sluicing additional ash to the ash pond. The alternative that was deemed reasonable, dry ash disposal, was thoroughly explored by Ameren in the antidegradation assessment and found to be unaffordable.

31. Ameren provided an affordability analysis on December 4, 2009 using US EPA's Interim Economic Guidance for Water Quality Standards. The analysis applied the guidance to just one alternative, a dry ash landfill, and estimated the capital cost of an expanded landfill at $8.5 million. A Supplemental Alternatives Analysis dated August 19, 2010 inexplicably increased the capital cost of the landfill to $10.5 million. Regardless of the unexplained $2 million cost increase, the results of the August 19th analysis fail to show that use of a dry ash landfill is not economically feasible. For instance, in Worksheet I, Ameren demonstrated that use of a dry ash landfill would result in just a 6% change in the profit rate.

    Worksheet J demonstrates that Ameren has enough liquidity to cover its short term obligations. According to the EPA guidance, the current ratio (a measure of liquidity) of the discharger in question should be compared with ratios of other dischargers in the same line of business. If the discharger's ratio compares favorably with that of similar businesses, it should be able to cover its short term obligations. According to Ameren, its current ratio is "believed to be similar to other Illinois merchant electricity generation companies." See Worksheet J, Affordability Analysis, 8/19/10. As such, Ameren should be liquid enough to meet one of the prerequisites for obtaining financing for the landfill.

    Worksheet K measures a company's solvency, or its ability to meet fixed and long-term obligations. If the beaver ratio is > 0.20, the company is considered solvent. Ameren's calculations of the beaver ratio show that is was solvent in 2 of the 4 years examined. According to the EPA guidance, the beaver ratio should be compared with that of firms in similar businesses. A favorable comparison demonstrates solvency. Again, according to Ameren, its beaver ratio is "believed to be similar to other Illinois merchant electricity generation companies." See Worksheet K, Affordability Analysis, 8/19/10.

    Finally, Worksheet L measures the degree of leverage a company has, which indicates how much more money a firm is capable of borrowing. If the debt-to-equity ratio compares favorably with that of similar businesses, the firm should be able to borrow additional funds. According to Ameren, its debt-to-equity ratio is "believed to be similar to other Illinois merchant electricity generation companies. See Worksheet L, Affordability Analysis, 8/19/10.

By Ameren's own calculations and findings, it appears to have the liquidity, solvency and leverage needed to finance a dry ash landfill. At a minimum, Ameren's analysis fails to demonstrate that a dry ash landfill is not economically feasible. Because Ameren has failed to meet its burden regarding the showing of necessity, the increased pollutant loadings of TSS, phosphorus, mercury, and other heavy metals to Newton Lake cannot be permitted.

Response: The Illinois EPA noticed an error in U.S.EPA's Worksheet G; the formula for the annualization factor is not correct. The annualization factor results as calculated from the worksheet formula were compared to Appendix B and the Agency noted that the results were not the same. The annualization factor should be = $(i\ (1 + i)^n) / ((1 + i)^n - 1)$. This makes the total annual cost of the pollution control project $2,835,000 instead of the reported $1,491,200.

According to Worksheet J, the average current ratio is 0.75 for the 4 years reported. According to the U.S.EPA guidance, a current ratio greater than 2 indicates that the entity should be able to cover its short-term obligations. No current ratio values were above 2, indicating that the entity may not be able to cover its short-term obligations.

According to Worksheet K, the average beaver ratio is 0.197 for the 4 years reported. According to the U.S.EPA guidance, if the beaver ratio is >0.20, the company is considered solvent. When the beaver ratio is between 0.15 and 0.20, then the future solvency of the company is uncertain.

Based on the information provided by Ameren in the Affordability Analysis dated August 19, 2010, the Illinois EPA has determined that the cost of landfill construction represents a substantial impact and an undue financial burden.

32. Was mine filling of the ash material considered as an alternative to the filling of the ash pond?

Response: Mine filling was considered. However, the source of the coal is not near the power plant, and therefore the ash would have to be hauled many miles to the source mine. Consequently, Ameren excluded that option.

33. When I looked at the alternatives, I saw landfilling, using the existing ash ponds, and additional treatment. Nothing stood out as preventing additional pollutant loading for the existing system. Can you describe what preventive measures were suggested by the Agency?

Response: One obvious alternative existed for the prevention of pollutant load increases at this facility. Keeping the ash handling in the dry disposal mode stood out as the one reasonable alternative that required further study. Ameren completed studies on this alternative and concluded that the creation of additional landfill space that would allow continuation of dry ash disposal was less affordable than the wet sluicing of the ash to the existing ash pond.

Groundwater Monitoring Issues:

34. Groundwater monitoring results from other coal ash ponds in our state indicate [groundwater] problems and I note that the ash ponds here are located in the floodplain of the two tributaries going to Newton Lake. Has either Ameren or Illinois EPA been monitoring groundwater between those ash ponds and the tributaries to Newton Lake, and has groundwater been contaminated? Is there any evidence that there is a link between those ash ponds to Newton Lake through the groundwater?

    Response: Four groundwater monitoring wells monitor the impoundment, one upgradient and three downgradient of the ash pond. Ameren has been monitoring that area's groundwater since the fall of 2010 and has provided to the Illinois EPA's BOW the results from five quarters of sampling. There are elevated concentrations of some constituents at the three downgradient wells based upon these data. (See also responses to questions #36 and #41.) Special Condition 25 has been added to the permit which requires groundwater monitoring and an assessment of impacts. It also includes requirements if additional impacts to groundwater are occurring.

35. The antidegradation assessment states that in January of 2009, Ameren installed an in-situ formed fiberglass liner on their existing discharge pipe from the secondary ash pond, and that the liner patched holes in the discharge pipe which slightly increased the flow to Outfall 001. Am I correct in understanding that this is the connection between the primary ash pond and secondary ash pond that the fiberglass liner was put underneath?

    Response: Both the overflow pipe from the primary ash pond to the secondary ash pond and the discharge pipe from the secondary ash pond into Newton Lake were relined.

36. It sounds like there were losses of ash sluice water from the holes in the [ash pond connecting] pipes; is groundwater monitoring being done in that area to see what impact those losses might have had on groundwater?

    Response: There is no groundwater monitoring well located near these pipes. The existing groundwater monitoring system is designed to monitor groundwater contamination from the site as a whole.

37. Are there active groundwater wells in the vicinity of Newton Lake?

Response: Ameren performed a potable well survey within 2,500 feet of their facility. There were eight community water supply wells within the area. Five private wells were definitely identified within the area, and another eight private wells were possibly within the area but locational data was insufficient. None were located downgradient of the ash pond.

38. Is there any reason why Illinois EPA can't prevent Ameren from moving more ash through the systems while this investigation is taking place? There's a lot of acreage out there. It seems like the ash could be held somewhere else other than pushed through those ash ponds while the Agency determines how bad a [groundwater] problem exists.

    Response: This ash is a pollution control waste therefore its management as a non-hazardous special waste would be subject to Illinois EPA's Bureau of Land (BOL) regulation if the ash were stored in a waste pile rather than managed in the ash ponds. Storing dry ash on the ground surface would not be an improvement to the ash ponds. The ash ponds not only provide for storage of the ash, but also provide treatment -- extended settling time -- for the ash slurry. Dry ash stored in a temporary waste pile would be exposed to wind and stormwater and ultimately could enter Lake Newton.

    The Agency's BOW evaluated Ameren's request for authorization to discharge increased loadings to the ash pond and based its decision on whether that proposal complied with Clean Water Act regulations.

39. Illinois EPA has one calendar quarter's worth of groundwater data that shows that there are exceedances of some constituents downgradient of the ash pond but has a permit out on public notice to increase the amount of ash that's going through those ash ponds and the loading of multiple constituents to the lake.

    Prairie Rivers Network requests that this permit remain on public notice until the extent of groundwater problems has been completely investigated at those ash ponds so that current groundwater problems are not exacerbated by something permitted in the future.

    Response: Groundwater impacts from the ash pond have been confirmed. Special Condition 25 has been added to the permit which requires groundwater monitoring and an assessment of impacts. It also includes requirements if additional impacts to groundwater are occurring.

40. What is the IEPA doing to prevent pollutants that are or will be in the ash pond from leaching into groundwater or from exceeding water quality standards at Newton Lake?

Response: Special Condition 25 has been added to the permit which requires groundwater monitoring and an assessment of impacts. It also includes requirements if additional impacts to groundwater are occurring.

We already have data on the surface water discharge to Newton Lake. There are additional metals monitoring requirements in the permit. There should be sufficient data once the discharge occurs that we can demonstrate that our assumptions on water quality are correct. The purpose of the additional monitoring is to have enough data to demonstrate there is not a reasonable potential to exceed water quality standards for other constituents.

41. Illinois' groundwater quality standards prohibit the release of any contaminant that causes an exceedance of a groundwater quality standard. *35 IAC 620.405*. IEPA has evidence of exceedances of manganese and sulfate standards in the groundwater wells at Newton Station. This data suggests leakage from the ash ponds. Contamination of Newton Lake via groundwater flows from leaky ash ponds is also a real possibility given the fact that arms of the lake nearly surround the Ameren site.

Before the agency permits a two-fold increase in flow to these ponds, it should identify the source of the contamination through more rigorous monitoring. Quarterly monitoring, as proposed, is grossly deficient and will not allow for observation of seasonal and temporal variation or for achievement of statistical significance for years to come.

Monitoring should be designed to determine if contaminants are reaching the lake via groundwater. At a minimum, the agency should require monthly monitoring of groundwater and a delay or denial of permit reissuance until the data show no contamination.

Response: The Agency' BOW has received five quarters of groundwater data from the site. This data confirms that there are impacts to groundwater from the impoundment. Special Condition 25 has been added to the permit which requires groundwater monitoring and an assessment of impacts. It also includes requirements if additional impacts to groundwater are occurring.

The spatial and temporal variation of concentrations over four calendar quarters is adequate to reliably determine statistical background concentrations in order to assess groundwater and determine future actions that may be needed. For example, a T-table in a typical statistical analysis contains T values representative of four samples, which is similar to the quarterly monitoring we asked the facility to conduct. In addition, 35 IAC Section 742.410 (b)(C) refers to Appendix A, Table B which provides tolerance factors for as few as 3 samples for determination of area background.

42. We learned at the public hearing, that ash is currently disposed of in an onsite landfill managed by the Bureau of Land. We also learned that the landfill is operating under a groundwater management zone (GMZ) because it has contributed to contamination of underlying groundwater. According to IEPA's webpage on establishing groundwater management zones:

> For a GMZ to be established, the groundwater within the proposed GMZ must be managed to mitigate impairment caused by the release of contaminants from a site. Source removal actions to prevent additional contamination from reaching groundwater must occur along with groundwater management.
> http://www.epa.state.il.us/land/regulatory-programs/permits-and-management/establishing-groundwater-management-zone.html

Increasing the source materials at a site where a GMZ has been granted and is ongoing would appear to be inconsistent with this requirement.

Response: There are two landfill units at Ameren's Newton Station: Phase 1 and Phase 2. Phase 1 (site ID# 0798080002), has a GMZ established but, since 1996, has not accepted ash. Phase 1 has applied for closure. Phase 2 (site ID# 0798085001) is actively accepting ash but has had no releases to groundwater.

The GMZ at the Phase 1 unit was established to address impaired groundwater and requires corrective action activities at the ash landfill to mitigate groundwater impacts pursuant to agreement with the Illinois EPA's Bureau of Land (BOL). In the case of a landfill regulated by BOL, "source removal actions" typically means leachate removal or control of leachate generation. Releases of leachate are typically identified as the source of groundwater contamination at landfills. In other words, leachate removal is source removal, which is what Ameren is doing at its Phase 1 ash landfill.

35 IAC Section 620.250 a) defines the GMZ as "a three dimensional region containing groundwater being managed to mitigate impairment caused by the release of contaminants from a site:

1) That is subject to a corrective action process approved by the Agency; or

2) For which the owner or operator undertakes an adequate corrective action in a timely and appropriate manner and provides a written confirmation to the Agency. Such confirmation must be provided in a form as prescribed by the Agency.

b) A groundwater management zone is established upon concurrence by the Agency that the conditions as specified in subsection (a) are met and groundwater management continues for a period of time consistent with the action described in that subsection.

c) A groundwater management zone expires upon the Agency's receipt of appropriate documentation which confirms the completion of the action taken pursuant to subsection (a) and which confirms the attainment of applicable standards as set forth in Subpart D. The Agency shall review the on-going adequacy of controls and continued management at the site if concentrations of chemical constituents, as specified in Section 620.450(a)(4)(B), remain in groundwater at the site following completion of such action. The review must take place no less often than every 5 years and the results shall be presented to the Agency in a written report."

Issues Outside the Scope of this NPDES Permit Modification

43. We noted that there were two sewage treatment plant discharges (at outfalls A01 and 003), but we didn't see any monitoring requirements or limits for fecal coliform. Is disinfection happening at those two discharges?

We would like to see that disinfection is taking place at both those outfalls or that there's a demonstration that there aren't going to be exceedances of the fecal coliform levels of concern considering there is contact recreation at Newton Lake.

Ameren is discharging undisinfected sewage into the lake and must disinfect the waste stream in order to protect the existing recreational uses of the lake.

Response: Disinfection exemptions were effective for Outfalls A01 and 003 on February 5, 1998 and January 6, 1994 respectively, which is why there are currently no fecal coliform limitations for these effluents. This permit modification did not affect the disinfection exemption, but it will be reviewed as part of the separate permit renewal.

44. Outfall 002 looks like it's in the middle of a long channel. Why is outfall 002 located where it is? It looks like the actual release of the cooling water is going to be much further upstream and closer to the plant. Is there something special about that location?

Response: The Outfall 002 location was correctly identified on the map contained in the public notice/fact sheet. However, the coordinates noted on page 2 of the public notice/fact sheet have been changed to more accurately reflect the actual outfall location. The corrected Outfall 002 coordinates are 38°56'29" North and 88°18'25" West.

45. Temperature and total residual chlorine monitoring at outfall 002 is continuous; where is the actual monitoring of temperature taking place? Special Condition 8 provides a 26 acre mixing zone for temperature.

    Response: Temperature monitoring for Outfall 002 occurs in Lake Newton at the edge of the regulatory mixing zone described in Special Condition 8.

46. I know that this is a reservoir so it's flooded streams, but that section, that segment of what's called a lake where Outfall 002 is located looks much more like a stream environment, so it could be inhabited by mussels. Has a mussel survey has been done anywhere in that region?

    Response: Illinois EPA is not aware of mussel surveys in the upper regions of Newton Lake.

47. Maybe this is a leftover from the last permit, but Special Condition 5 authorizes additional temporary supplemental cooling towers to be built; have any been built?

    Response: The intent of Special Condition 5 was a construction authorization to allow Ameren to add supplemental cooling towers if needed. There have not been any supplemental cooling towers constructed in the last five years.

48. This permit expires January 31, 2012. This hearing is about the modifications you have described. Will there be another permit action for the renewal?

    Response: We will have another permit process for the permit renewal with an additional period for public participation.

Distribution of Responsiveness Summary

An announcement of the NPDES permit decision and the availability of the responsiveness summary has been sent to all who registered at the hearing and to all who provided written comments. The Responsiveness Summary has been posted on the Illinois EPA web site at: http://www.epa.state.il.us/public-notices/npdes-notices.html#ameren-newton. Printed copies of this responsiveness summary are available from Illinois EPA Hearing Officer Dean Studer (217-558-8280).

For Further Information:

Illinois EPA Bureau of Water Hearing Panel:

NPDES technical issues	Brian Cox	217-782-0610
NPDES legal issues	Stefanie Diers	217-782-5544
Surface water quality issues	Bob Mosher	217-782-3362
Groundwater quality issues	Amy Zimmer	217-557-3181
Public hearing issues	Dean Studer	217-558-8280

Illinois EPA Bureau of Land:

Landfill issues	Chris Liebman	217-524-3294

Acronyms and Abbreviations

BOD	Biochemical oxygen demand
COD	Chemical oxygen demand
CFR	Code of Federal Regulations
DMR	Discharge Monitoring Report
IDNR	Illinois Department of Natural Resources
IEPA	Illinois Environmental Protection Agency
ILCS	Illinois Combined Statutes
IAC	Illinois Administrative Code
mg/L	milligrams per liter
MGD	Million Gallons per Day
NPDES	National Pollutant Discharge Elimination System
pH	A measure of acidity or alkalinity of a solution
TDS	total dissolved solids
TMDL	total maximum daily load
TSS	total suspended solids
303(d)	Section of federal Clean Water Act dealing with surface water quality standards.
7Q10	Lowest continuous seven-day flow during a 10-year period.

Illinois Pollution Control Board
R2014-10

T. Barkley: Exhibit M

Vermilion Generating Station: Risks to the Aquatic Resources of the Middle Fork of the Vermilion River

Interim Report to Prairie Rivers Network

16 July 2014

Jeff Levengood and Dave Soucek

Illinois Natural History Survey
Prairie Research Institute
University of Illinois at Urbana-Champaign

Objective: To examine concentrations of selected elements in water, invertebrates and fish collected from the Middle Fork of the Vermilion River (MFVR) in proximity to the Vermilion Generating Station (VGS) in order to determine if elevated concentrations of selected elements consistent with coal combustion residuals (CCR) are present, and, if so, estimate the potential for risks to the aquatic resources of the river as well as to secondary consumers.

Field and Laboratory Activities:

1) Water samples were collected on 16 October 2013 from 3 locations; one upstream and two downstream of the VGS (Fig. 1). Water was collected directly into acid-cleaned Nalgene bottles. Four water samples were collected at each location, one each for: total elements, total mercury, dissolved elements, and dissolved mercury. Water samples were immediately placed on ice and transferred to a refrigerator within hours of collection. Water for determination of dissolved elements was filtered within 24 hours of collection.

2) Snails (*Elimia livescens*) were hand-collected on 16 October 2013 from two locations (Fig. 1). Snails were removed from the shell and individuals (approximately 12 snails) placed in a plastic bag to form composite samples of ≥ 1 gram wet weight. A total of 5 composite samples were collected from upstream and downstream (DS1) locations.

3) Fish were collected 30 September 2013 via backpack DC electrofishing from two stretches of the MFVR, one located upstream and another located downstream of the VGS (Fig. 1). Fish were netted, placed in plastic buckets and sorted by size and species; a total of 31 longear sunfish (n= 16 downstream, 15 upstream) of similar size (91-115mm total length) were weighed, euthanized and placed on wet ice. An additional nine specimens representing five species were also collected. Specimens were transported to the laboratory where 5 sunfish from each location were filleted and all fillets and whole specimens placed into a standard freezer.

4) Water and tissue samples were prepared and analyzed for total mercury by flow injection atomic fluorescence spectrometry in accordance with US EPA 1631 E and US EPA 1631 B, respectively. Tissue and water samples were prepared and analyzed for total recoverable metals by inductively-coupled plasma mass spectrometry in accordance with a modified version of USEPA 1638 (EFGS-054) and by USEPA 200.8 (EFGS-054), respectively. See appendix for analytical quality control information.

Results and Discussion:

Water

Concentrations of 11 elements were appreciably greater in water samples (1 or both fractions) collected at both downstream locations than in the sample from upstream of the VGS (Table 1). This was especially true for total Cd, Cr, Hg, Pb and Zn, and dissolved Co, which were below detectable limits in the upstream water sample but were present in detectable concentrations downstream. Total Se and dissolved Zn concentrations were not detected at the furthest downstream location.

Snails

Neither B or Be were detected in snails. Ten of the 14 detectable elements were present in significantly greater concentrations in snails collected downstream of the VGS ash ponds (Table 2; Fig. 2); mean concentrations of Ba, Mn, Se and Sr did not differ significantly between locations.

Fish

Arsenic and Cr were detected in few whole longear sunfish specimens at either location (Table 3). Of those elements with enough detections for statistical comparison, concentrations did not differ significantly ($P > 0.05$) between locations. Mercury concentrations in fillets did not differ by location (Table 3).

Assuming that all of the measured mercury consisted of the methylated form (MeHg), mercury concentrations in all of the whole sunfish examined exceeded the threshold of 33 µg/g MeHg for the protection of wildlife that consumer aquatic biota (Canadian Council of Ministers of the Environment. 2000). Thus, according to this measure, consumption of longear sunfish from this portion of the Middle Fork of the Vermilion River poses a health risk to fish and wildlife consuming them. Mercury concentrations in fillets from 8 of 10 sunfish (4 fish from each location) exceeded the Illinois sportfish consumption advisory threshold (60 µg/g) recommending that sensitive cohorts restrict consumption to 1 meal per week (Fig. 3).

Conclusions

These results indicate that a suite of elements consistent with those in CCR are present in greater concentrations in water and snails downstream of the VGS CCR ponds along the MFVR. Dissolved elements in water samples did not approach state water quality criteria.

The snails *Elimia livescens* were collected from submerged rocks, where they likely fed on periphyton and/or epilithon (particulate organic matter attached to the rocks). Thus, their primary exposure route would be compounds sorbed to algae growing on rocks or previously-suspended particles that had subsequently settled from the water column. Although the concentrations of 10 elements were greater in snails collected downstream compared to those from upstream, the concentrations were low and were similar to or lower than in snails from reference sites, and much lower than those from contaminated sites, in previous studies (e.g., Mahmoud and Abu Taleb 2013; Holmberg et al. 2011; Benton et al. 2002). It should be noted that gastropods differ widely in their propensity to uptake and accumulate elements and there was no information available on the species we examined.

Longer sunfish are broadly carnivorous, consuming a wide range of animal matter including snails and other mollusks. Although we observed greater concentrations of elements in snails and water downstream of VGS, the lack of elevated concentrations of these same elements in fish suggests that exposures were not great enough to cause accumulation in the sunfish. Vertebrates tend to have a greater capacity to regulate levels of elements in tissues than do invertebrates, which may explain this finding.

Acknowledgments- Special thanks to Amy Dickinson and Tim Edison, INHS, for their assistance.

References

Benton MJ, Malott ML, Trybula J, Dean DM, Guttman SI. 2002. Genetic effects of mercury contamination on aquatic snail populations: allozyme genotypes and DNA strand breakage. Env Toxicol Chem 21:584-589.

Canadian Council of Ministers of the Environment. 2000. Canadian tissue residue guidelines for the protection of wildlife consumers of aquatic biota: Methylmercury. In: Canadian environmental quality guidelines, 1999, Canadian Council of Ministers of the Environment, Winnipeg.

Holmberg RD, Madsen H, Kristensen, TK, Jørgensen A. 2011. Gastropod distribution in Lakes George and Edward, Uganda, relative to copper and cobalt levels. African J Aquatic Sci. 36:191-196.

Mahmoud, Kadria MA; Abu Taleb, Hoda MA. 2013. Fresh water snails as bioindicator for some heavy metals in the aquatic environment. African J Ecol 51:193-198.

Prospectus:

1) Conduct additional collections of water during summer of 2014 from several additional stations to be located between the upstream and downstream sampling stations in the current report.

2) Analyze the additional fish samples collected in 2013 to examine possible trophic level differences in exposures.

Table 1. Selected elements in water from the Middle Fork of the Vermilion River collected upstream and downstream of the Vermilion GeneratingStation, September 2013. ND= not detected.

					downstream 1		downstream 2		upstream 1	
	units	CMC[1]	CCC[2]	[3]302.208(g)	total	dissolved	total	dissolved	total	dissolved
Arsenic	µg/L	360	190		1.67	1.51	1.88	1.54	1.66	1.56
Barium	µg/L			5000	42.1	40.9	41.5	40.8	41.4	40.1
Beryllium	µg/L				ND	ND	ND	ND	ND	ND
Boron	µg/L	40,100	7,600		760	724	737	722	244	235
Cadmium	µg/L	34	2.5		0.025	0.035	0.04	0.033	ND	0.023
Calcium	µg/L				69000	67000	68700	68900	66400	66600
Chromium III	µg/L	1,488	483		0.17	ND	0.18	ND	ND	ND
Chromium VI	ug/L	16	11							
Cobalt	µg/L				0.2	0.12	0.22	0.13	0.11	ND
Lead	µg/L	277	58		0.147	ND	0.183	ND	0.044	ND
Magnesium	µg/L				41200	41200	42200	41400	40800	39700
Manganese	µg/L	10,380	4,410		29.9	18.8	33.9	20.5	14	10
Mercury	ng/L	2.2	1.1		0.53	ND	0.65	ND	ND	ND
Molybdenum	µg/L				7.74	7.8	8	7.87	2.97	2.82
Selenium	µg/L			1000	0.93	0.98	ND	0.91	0.6	ND
Strontium	µg/L				255	262	260	248	246	246
Thallium	µg/L				ND	ND	ND	ND	ND	ND
Vanadium	µg/L				0.82	0.61	0.84	0.64	0.67	0.62
Zinc	µg/L	335	88		1.62	0.52	1.78	ND	ND	ND

hardness based standards calculated using overall mean hardness (338 mg/L)

[1] Illinois Numeric Water Quality Standards 302.208 (e)
CMC= Criterion Maximum Concentration

[2] Illinois Numeric Water Quality Standards 302.208 (e)
CCC= Criterion Continuous Concentration

[3] 302.208(g) values are Single Value Standards and are "not to be exceeded"

Table 2. Concentrations (mg/kg wet wt) of selected elements in snails collected from the Middle Fork of the Vermilion River upstream and downstream of the Dynegy Vermilion Generating Station 10 October 2013. Data are means (sd) of 5 replicate samples.

Element	Downstream		Upstream		P Value
Arsenic	2.05	(0.12)	1.59	(0.15)	0.0015
Barium	15.4	(3.3)	13.6	(7.2)	0.6517
Beryllium	ND		ND		
Boron	ND		ND		
Cadmium	0.117	(0.028)	0.050	(0.011)	0.0019
Chromium	0.87	(0.16)	0.45	(0.14)	0.0051
Cobalt	0.72	(0.21)	0.25	(0.06)	0.0023
Lead	0.539	(0.149)	0.267	(0.087)	0.0136
Manganese	59.1	(7.9)	50.6	(9.0)	0.1955
Mercury (ug/kg)	21.2	(0.4)	14.0	(0.1)	0.0044
Molybdenum	0.15	(0.01)	0.08	(0.01)	<0.0001
Selenium	0.49	(0.05)	0.36	(0.17)	0.1865
Strontium	34.9	(9.8)	33.8	(22.6)	0.9311
Thallium	0.033	(0.004)	0.021	(0.003)	0.0009
Vanadium	1.16	(0.26)	0.53	(0.13)	0.0026
Zinc	21.2	(2.1)	16.4	(1.6)	0.0068

Table 3. Concentrations (mg/kg wet wt) of selected elements in whole-body homogenates and fillets of longear sunfish collected from the Middle Fork of the Vermilion River upstream and downstream of the Vermilion Generating Station, 30 September 2013.

Whole fish

		Downstream		Upstream		
Element	units	mean	std dev	mean	std dev	p-value
Arsenic	mg/kg	<0.05*	2 detects (0.20 and 0.23)	<0.05	1 detect (0.19)	na
Cadmium	mg/kg	0.007	0.008	0.007	0.005	0.9232
Chromium	mg/kg	<0.03	3 detects (0.17, 0.93, 0.30)	<0.03	2 detects (0.15, 0.13)	na
Lead	mg/kg	0.03	0.01	0.02	0.02	0.6766
Mercury	ng/g	55.2	15.4	58.1	20.3	0.7316
Selenium	mg/kg	0.64	0.17	0.53	0.26	0.2601

*means reported as < had less than 1/2 samples above DL

Fish Fillets

		Downstream		Upstream		
	units	mean	std dev	mean	std dev	p-value
Hg	ng/g	91.3	30.2	99.7	30.7	0.7054

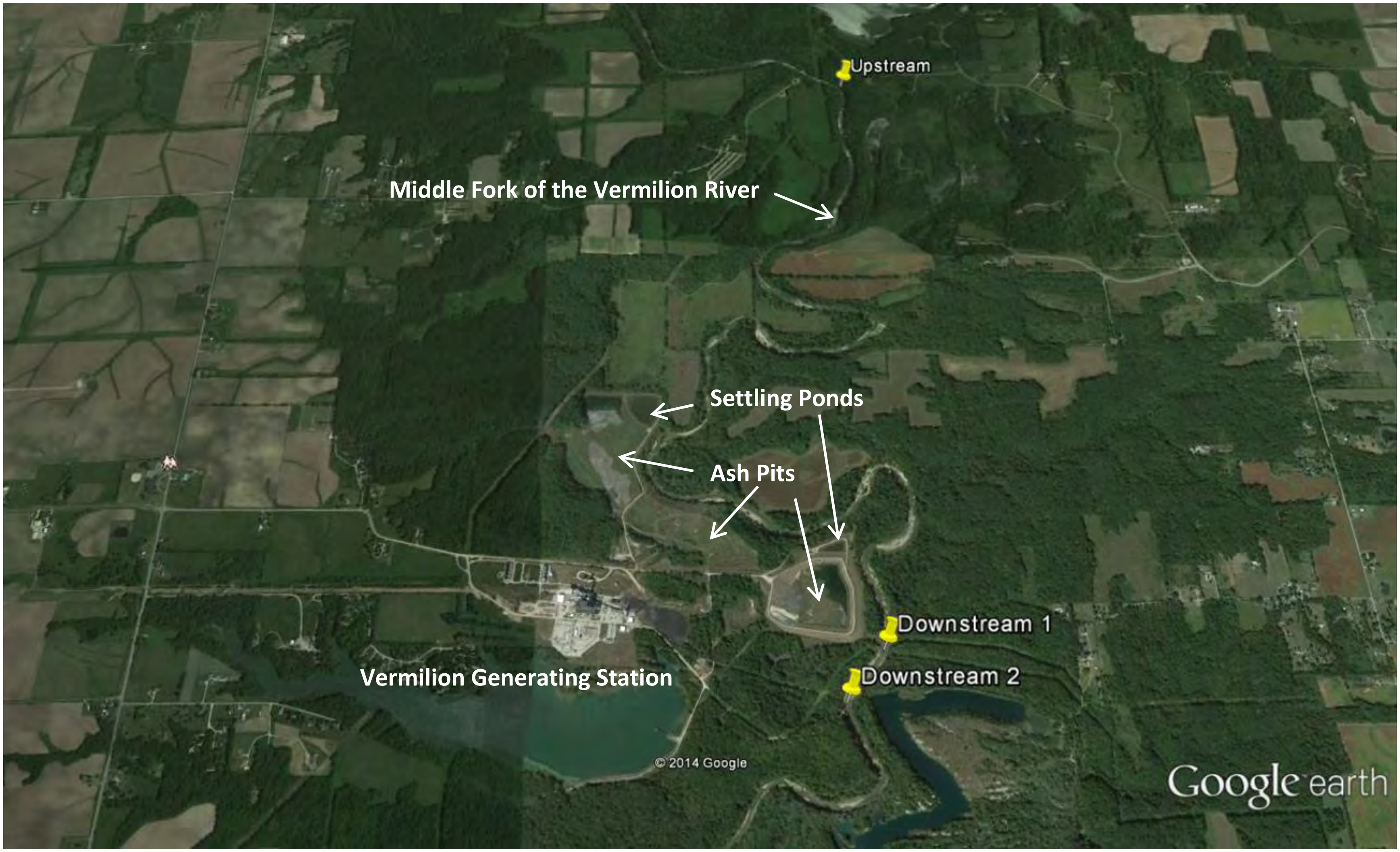

Figure 1. Map of a portion of the Middle Fork of the Vermilion River, Illinois, and environs showing location of Vermilion Generating Station, coal combustion residuals ponds, and water and biota collection sites.

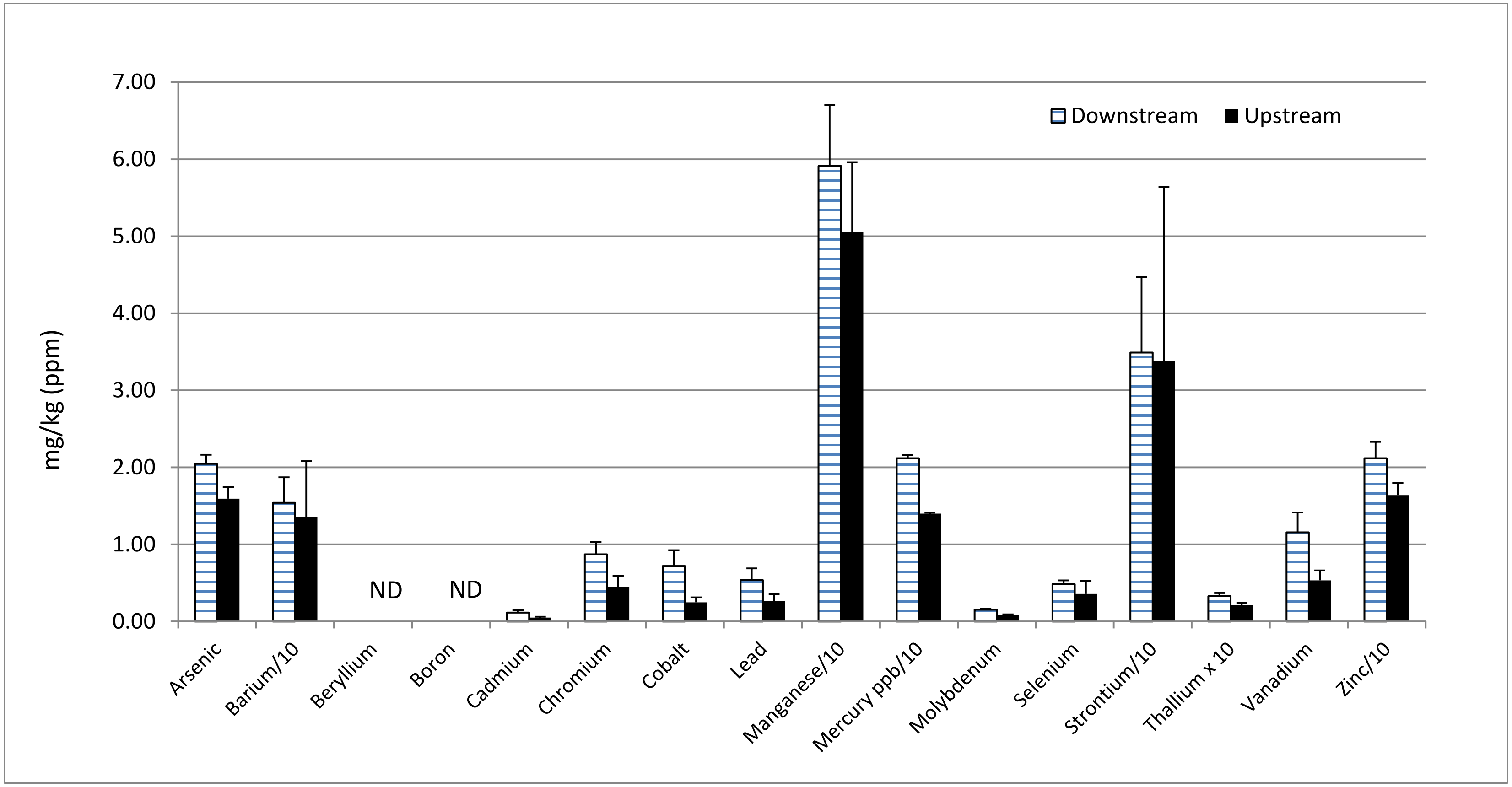

Figure. 2. Concentrations (mean + sd) of elements in snails (*Elimia livescens*) collected on 16 October 2013 from locations upstream and downstream of the Vermilion Generating Station on the Middle Fork of the Vermilion River.

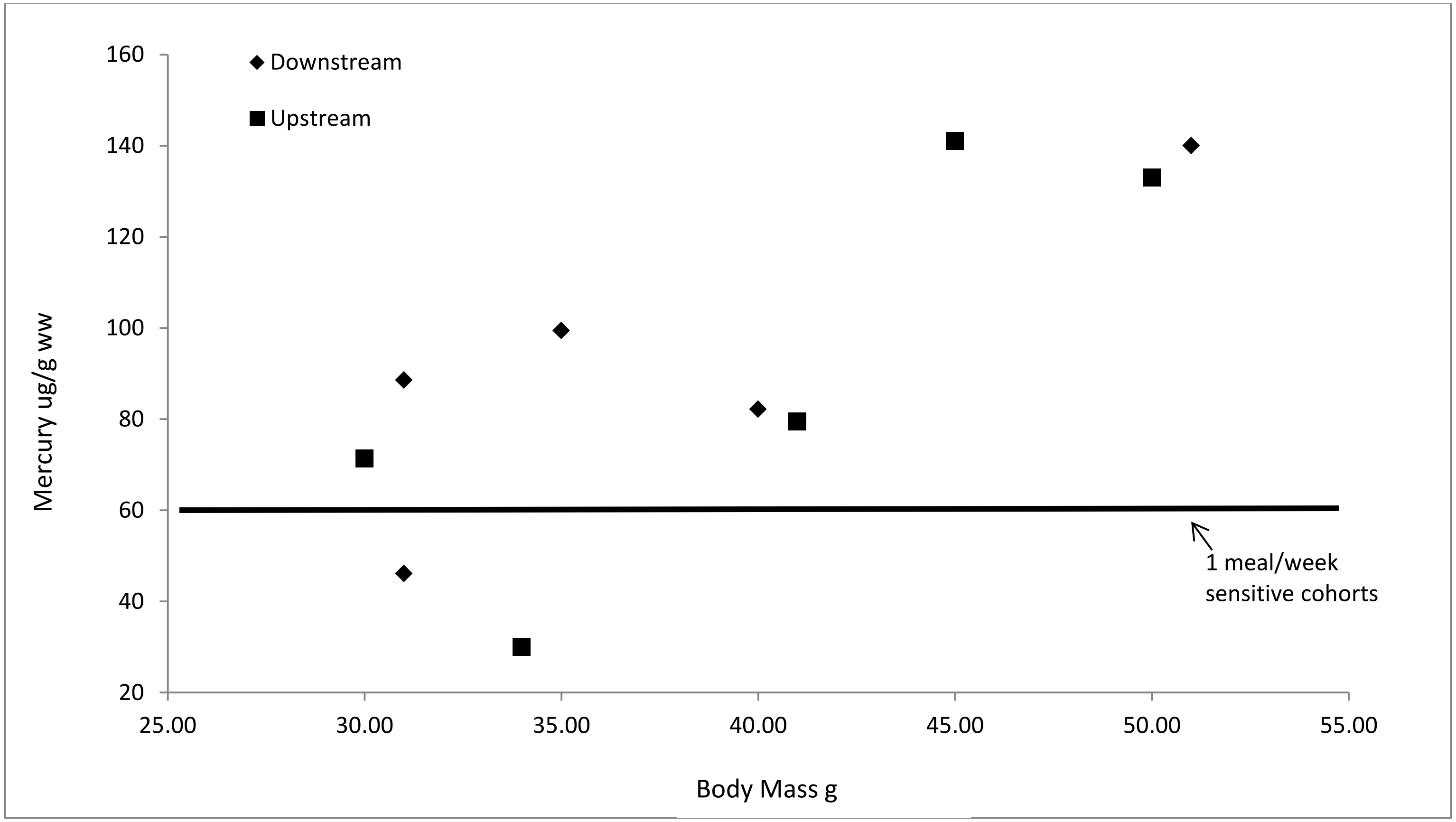

Figure 3. Concentrations of mercury in whole body homogenates of longer sunfish (*Lepomis megalotis*) collected 30 September 2013 via backpack DC electrofishing from two stretches of the MFVR, one located upstream and another located downstream of the VGS.

Appendix. Project Analytical Quality Control Information.

Method blanks were prepared for every preparation to assess possible blank contribution from the sample preparation procedure. The method blanks were carried through the entire analytical procedure. All blanks fell within the established acceptance criteria with the exception of any items noted below.

Liquid spikes, certified reference material (CRM) or a quality control samples (QCS) were prepared for every preparation as a measure of accuracy. All liquid spikes, CRMs and/or QCS samples fell within the established acceptance criteria with the exception of any items noted below.
As an additional measure of the accuracy of the methods used and to check for matrix interference, matrix spikes (MS) and matrix spike duplicates (MSD) were digested and analyzed. All of the matrix spike recoveries fell within the established acceptance criteria with the exception of any items noted below.

A reasonable measure of the precision of the analytical methods is the relative percent difference (RPD) between a matrix spike recovery and a matrix spike duplicate recovery and between laboratory control sample recovery and laboratory control sample duplicate recoveries. All of the relative percent differences established acceptance criteria with the exception of any items noted below.

Water
Blanks contained detectable Se, however, concentrations were low (<10%) compared to concentrations in water samples. In one case the Se concentrations was > the method reporting limit (MRL), however the sample concentrations in that batch were < the MRL.

Calcium, Mg Sr and B recoveries were outside of acceptable limits in several matrix spike (MS) samples, however these batches were deemed acceptable based on good Laboratory Control Spike (LCS) and Laboratory Control Spike Duplicate (LCSD) recoveries within control limits.

The recovery of Se in one matrix spike was outside of acceptable limits; however the batch was deemed acceptable based on LCS and LCSD recoveries within control limits.

The relative percent difference for Se in one MS duplicate pair was outside of acceptable limits. However the batch was deemed acceptable based on good MS/MSD and LCS/LCSD RPD values.

Tissue

Be and Tl recoveries were outside of acceptable limits in one MS, however these batches were deemed acceptable based on Laboratory Control Spike (LCS) and Laboratory Control Spike Duplicate (LCSD) recoveries within control limits.

The relative percent difference for Be, Mn, Sr (n= 2), Tl amd Zn were outside of acceptable limits in one MS or MS/MSD pair. However, the batch was deemed acceptable based on good MS/MSD and LCS/LCSD RPD values.

The analytical and matrix spike recoveries for Sr and Zn in two samples were outside control limits. The batch was accepted based on MS/MSD and LCS/LCSD recoveries within control limits.

Electronic Filing - Received, Clerk's Office : 07/17/2014

Illinois Pollution Control Board
R2014-10

T. Barkley: Exhibit N

ILLINOIS ENVIRONMENTAL PROTECTION AGENCY

1021 North Grand Avenue East, P.O. Box 19276, Springfield, Illinois 62794-9276 • (217)782-2829
Pat Quinn, Governor **Lisa Bonnett**, Director

217/782-0610

December 13, 2013

AmerenEnergy Medina Valley Cogen, LLC
1901 Chouteau Avenue
P.O. Box 66149, MC - 602
St. Louis, MO 63166

Re: AmerenEnergy Medina Valley Cogen, LLC
Meredosia Energy Center
NPDES Permit No. IL0000116
Modification of NPDES Permit (After Public Notice)

Gentlemen:

The Illinois Environmental Protection Agency has reviewed the request for modification of the above-referenced NPDES Permit and issued a public notice based on that request. The final decision of the Agency is to modify the Permit as follows:

1. The steam electric generating station will use an oxy-combustion boiler.
2. The condenser cooling water at outfall 001 will be discontinued.
3. The DCCPS wastewater treatment system discharge has been added to outfall 002.
4. Coal pile runoff, coal yard service wastewater, contact stormwater, demineralization building sump water, ASU/CPU cooling tower blowdown, area oil/water separator wastewater, process condensate/steam loss water, strainer backwash, and U4 oil/water separator wastewater have all moved from outfalls 003 or 004 to outfall 002.
5. The main cooling tower blowdown from outfall 002 has been lowered.
6. Bottom ash and fly ash discharges to outfalls 003 and 004, respectively, will be discontinued as the only remaining discharges from these outfalls are from stormwater runoff.
7. Outfall A03 will be discontinued.

The following changes have been made since the 30-day public notice of the permit:

1. The permittee name has been changed to AmerenEnergy Medina Valley Cogen, LLC.
2. Monitoring for sulfate has been added to outfall 002 on a monthly basis.
3. Monitoring for silver has been increased to a monthly basis. This monitoring is now listed at outfall 002 on page two of the permit instead of in Special Condition 16.
4. The concentration and load limit for phosphorus at outfall 002 has been lowered to 0.5 mg/L and 71 lb/day, respectively.
5. Special Condition 21 has been added to the permit. This Special Condition will require a Technical Feasibility Analysis for phosphorous at outfall 002 to be treated to 0.1 mg/L.

4302 N. Main St., Rockford, IL 61103 (815)987-7760
595 S. State, Elgin, IL 60123 (847)608-3131
2125 S. First St., Champaign, IL 61820 (217)278-5800
2009 Mall St., Collinsville, IL 62234 (618)346-5120
9511 Harrison St., Des Plaines, IL 60016 (847)294-4000
5407 N. University St., Arbor 113, Peoria, IL 61614 (309)693-5462
2309 W. Main St., Suite 116, Marion, IL 62959 (618)993-7200
100 W. Randolph, Suite 10-300, Chicago, IL 60601 (312)814-6026

Please Print on Recycled Paper

Enclosed is a copy of the modified Permit. You have the right to appeal this modification to the Illinois Pollution Control Board within a 35 day period following the modification date shown on the first page of the permit.

Should you have questions concerning the Permit, please contact Mark E. Liska at the 217/782-0610.

Sincerely,

Alan Keller

Alan Keller, P.E.
Manager, Permit Section
Division of Water Pollution Control

DEL:MEL:13061209.bah

Attachment: Final Permit

cc: Records
Compliance Assurance Section
Springfield Region
Billing
USEPA

NPDES Permit No. IL0000116

Illinois Environmental Protection Agency

Division of Water Pollution Control

1021 North Grand Avenue East

Post Office Box 19276

Springfield, Illinois 62794-9276

NATIONAL POLLUTANT DISCHARGE ELIMINATION SYSTEM

Modified (NPDES) Permit

Expiration Date: October 31, 2016

Issue Date: September 30, 2011
Effective Date: November 1, 2011
Modification Date: December 13, 2013

Name and Address of Permittee:
AmerenEnergy Medina Valley Cogen, LLC
1901 Chouteau Avenue
P.O. Box 66149, MC - 602
St. Louis, MO 63166

Facility Name and Address:
Meredosia Energy Center
800 South Washington Street
Meredosia, Illinois 62665
(Morgan County)

Discharge Number and Name:	Receiving Waters:
001 – Stormwater Runoff from Units 1, 2, and 3	Illinois River
002 – Main Cooling Tower Blowdown, CPU, DCCPS, and ASU Discharges, Misc. Discharges	Illinois River
A02 – Cooling Tower Emergency Overflow	Illinois River
B02 – Direct Contact Cooler Polishing System WWTS	Internal Outfall
C02 – Coal Handling Contact Stormwater WWTS	Internal Outfall
D02 – Hydrostatic Test Water	Internal Outfall
003 – Stormwater Runoff from Former Bottom Ash Pond	Illinois River
004 – Stormwater Runoff from Former Fly Ash Pond	Illinois River
006 – Intake Screen Backwash	Illinois River

In compliance with the provisions of the Illinois Environmental Protection Act, Title 35 of Ill. Adm. Code, Subtitle C and/or Subtitle D, Chapter 1, and the Clean Water Act (CWA), the above-named permittee is hereby authorized to discharge at the above location to the above-named receiving stream in accordance with the standard conditions and attachments herein.

Permittee is not authorized to discharge after the above expiration date. In order to receive authorization to discharge beyond the expiration date, the permittee shall submit the proper application as required by the Illinois Environmental Protection Agency (IEPA) not later than 180 days prior to the expiration date.

Alan Keller

Alan Keller, P.E.
Manager, Permit Section
Division of Water Pollution Control

SAK:MEL:13061209.bah

NPDES Permit No. IL0000116

Effluent Limitations and Monitoring

From the Modification date of this permit until the expiration date, the effluent of the following discharge(s) shall be monitored and limited at all times as follows:

Outfall: 001 – Stormwater Runoff (Intermittent Discharge)
Stormwater from Unit 1, 2, and 3 Roof Drains (Intermittent Discharge)

See Special Condition 15 for BAT/BCT Stormwater Rules.

Outfall: 002 – 1. Main Cooling Tower Blowdown (9.78 MGD)

2. B02 - Direct Contact Cooler Polishing System (DCCPS) Wastewater Treatment System (0.32 MGD) which treats:
    A. Compression and Purification Unit (CPU) Wastewater Treatment Plant (0.015 MGD)
    B. DCCPS Cooling Tower Blowdown (0.307 MGD)

3. Air Separation Unit (ASU)/CPU Cooling Tower Blowdown (0.1 MGD)

4. Area Oil/Water Separators (0.017 MGD) which treats ASU, CPU, and Boiler Island Service Water

5. Strainer Backwash (0.011 MGD)

6. Demineralization Building Sumps (0.029 MGD)

7. Process Condensate/Steam Loss (0.0012 MGD)

8. C02 - Coal Handling Contact Stormwater (CHCS) Wastewater Treatment System (0.004 MGD + Intermittent) treating:
    A. Contact Stormwater (Intermittent Discharge)
    B. Stormwater Detention Pond containing Coal Pile Runoff and Coal Yard Service Wastewater (0.004 + Intermittent)

9. Unit 4 Oil / Water Separator (0.03 MGD) which treats:
    A. U4 Bearing Cooling Water Makeup (< 100 GPD)
    B. Condensate Polisher Waste (0.00086 MGD)
    C. U1, U2, U3, and U4 Sump Pumps (0.0288 MGD)

10. D02 - Hydrostatic Discharge (Intermittent Discharge)

Total Discharge = 10.3 MGD

PARAMETER	LOAD LIMITS lbs/day DAF (DMF) 30 DAY AVERAGE	LOAD LIMITS lbs/day DAF (DMF) DAILY MAXIMUM	CONCENTRATION LIMITS mg/L 30 DAY AVERAGE	CONCENTRATION LIMITS mg/L DAILY MAXIMUM	SAMPLE FREQUENCY	SAMPLE TYPE
Flow	See Special Condition 1				Continuous	24-Hour Total
Total Residual Chlorine*		7.1		0.05	1/Week	Grab
Total Chromium	17	28	0.2	0.2	1/Month	Composite
Total Zinc	86	142	1	1	1/Month	Composite
Total Phosphorus		71		0.5	1/Month	Grab
Total Nitrogen				Monitor Only	1/Quarter	Grab
Sulfate				Monitor Only	1/Month	Grab
Total Silver				Monitor Only	1/Month	Grab
Mercury**				Monitor Only	1/Month	Grab

* See Special Condition 7.
**See also Special Condition 6.

NPDES Permit No. IL0000116

Effluent Limitations and Monitoring

From the Modification date of this permit until the expiration date, the effluent of the following discharge(s) shall be monitored and limited at all times as follows:

PARAMETER	LOAD LIMITS lbs/day DAF (DMF)		CONCENTRATION LIMITS mg/L		SAMPLE FREQUENCY	SAMPLE TYPE
	30 DAY AVERAGE	DAILY MAXIMUM	30 DAY AVERAGE	DAILY MAXIMUM		
Outfall A02 – Cooling Tower Emergency Overflow (Intermittent Discharge)						
Flow	See Special Condition 1				Daily When Discharging	24-Hour Total
Outfall B02 – Direct Contact Cooler Polishing System (DCCPS) Wastewater Treatment System (WWTS) (0.32 MGD) which treats: A. Compression and Purification Unit (CPU) Wastewater Treatment Plant (0.015 MGD) B. DCCPS Cooling Tower Blowdown (0.307 MGD)						
Flow	See Special Condition 1				Continuous	24-Hour Total
pH	See Special Condition 2				1/Month	Grab
Total Suspended Solids	80	517	30	100	1/Month	Grab
Oil and Grease	40	103	15	20	1/Month	Grab
Total Chromium	0.53	1.03	0.2	0.2	1/Month	Grab
Total Zinc	2.7	5.1	1	1	1/Month	Grab
Outfall C02 – Coal Handling Contact Stormwater (CHCS) Wastewater Treatment System (0.004 MGD + Intermittent) which treats: A. Contact Stormwater (Intermittent Discharge) B. Stormwater Detention Pond containing Coal Pile Runoff and Coal Yard Service Wastewater (0.004 + Intermittent)						
Flow	See Special Condition 1				Continuous	24-Hour Total
pH	See Special Condition 2				1/Month	Grab
Total Suspended Solids				50	1/Month	Grab

NPDES Permit No. IL0000116

Effluent Limitations and Monitoring

From the Modification date of this permit until the expiration date, the effluent of the following discharge(s) shall be monitored and limited at all times as follows:

PARAMETER	LOAD LIMITS lbs/day DAF (DMF) 30 DAY AVERAGE	LOAD LIMITS lbs/day DAF (DMF) DAILY MAXIMUM	CONCENTRATION LIMITS mg/L 30 DAY AVERAGE	CONCENTRATION LIMITS mg/L DAILY MAXIMUM	SAMPLE FREQUENCY	SAMPLE TYPE
Outfall D02 – Hydrostatic Test Water (Intermittent Discharge)						
Flow		See Special Condition 1			Continuous*	24-Hour Total
pH		See Special Condition 2			Daily*	Grab
Total Suspended Solids			15	30	Daily*	Grab
Oil and Grease			15	30	Daily*	Grab
Total Iron			2	4	Daily*	Grab

*Samples shall be on a daily basis when discharging.

If there is no discharge of hydrostatic test water during the calendar month, indicate "No Discharge" on the DMR form.

When test water is discharged to the same water body from which it was withdrawn, compliance with pH, total suspended solids, oil and grease, and iron is not required when effluent concentrations in excess of the standards result entirely from influent contamination, evaporation, and/or the incidental addition of trace materials not utilized or produced in the hydrostatic test activity that is the source of the waste.

Solid wastes such as straw used for filtering or erosion control shall be disposed of in accordance with state and federal law.

Outfall: 003* – Stormwater Runoff from Former Bottom Ash Pond (Intermittent Discharge)
Outfall: 004* – Stormwater Runoff from Former Fly Ash Pond (Intermittent Discharge)

Flow	See Special Condition 1				Measure When Monitoring	Single Reading
pH	See Special Condition 2				3/Week*	Grab
Total Suspended Solids			30	100	1/Week*	Composite
Oil & Grease			15	20	1/Week*	Composite
Mercury**				Monitor Only	1/Month*	Grab

* Monitoring shall occur only during a discharge. If the pond(s) do not discharge during a calendar month, report "No Discharge" on the DMR form. See also Special Condition 15 for BAT/BCT stormwater rules.
**See also Special Condition 6.

Outfall: 006 – Intake Screen Backwash (Discharge = 0.3 MGD)

Total Residual Chlorine*				0.05	2/Month	Grab

*See also Special Condition 7.

Special Conditions

SPECIAL CONDITION 1. Flow shall be measured in units of Million Gallons per Day and reported as a monthly average and a daily maximum on the monthly discharge monitoring report.

SPECIAL CONDITION 2. pH shall be in the range 6.0 to 9.0 and shall be reported as a daily maximum and a daily minimum.

SPECIAL CONDITION 3. This facility meets the allowed mixing criteria for thermal discharges at the edge of the mixing zone in the Illinois River, pursuant to 35 IAC 302.102. No reasonable potential exists for the discharge to cause exceedances of the thermal water quality standards in the Illinois River.

SPECIAL CONDITION 4. If an applicable effluent standard or limitation is promulgated under Sections 301(b)(2)(C) and (D), 304(b)(2), and 307(a)(2) of the Clean Water Act and that effluent standard or limitation is more stringent than any effluent limitation in the permit or controls a pollutant not limited in the NPDES Permit, the Agency shall revise or modify the permit in accordance with the more stringent standard or prohibition and shall so notify the permittee.

SPECIAL CONDITION 5. The Permittee shall record monitoring results on Discharge Monitoring Report (DMR) Forms using on e such form for each outfall each month.

In the event that an outfall does not discharge during a monthly reporting period, the DMR Form shall be submitted with no discharge indicated.

The Permittee may choose to submit electronic DMRs (eDMRs) instead of mailing paper DMRs to the IEPA. More information, including registration information for the eDMR program, can be obtained on the IEPA website, http://www.epa.state.il.us/water/edmr/index.html.

The completed Discharge Monitoring Report forms shall be submitted to IEPA no later than the 28th day of the following month, unless specified by the permitting authority. Permittees not using eDMRs shall mail Discharge Monitoring Reports with an original signature to the IEPA at the following address:

Illinois Environmental Protection Agency
Division of Water Pollution Control
1021 North Grand Avenue East
Post Office Box 19276
Springfield, Illinois 62794-9276

Attention: Compliance Assurance Section, Mail Code #19

SPECIAL CONDITION 6. All samples for mercury must be analyzed by EPA Method 1631E using the digestion procedure described in Section 11.1.1.2 of 1631E, which dictates that samples must be heated at 50°C for 6 hours in a bromine chloride (BrCl) solution in closed vessels.

SPECIAL CONDITION 7. All samples for Total Residual Chlorine shall be analyzed by an applicable method contained in 40 CFR 136, equivalent in accuracy to low-level amperometric titration. Any analytical variability of the method used shall be considered when determining the accuracy and precision of the results obtained.

SPECIAL CONDITION 8. There shall be no discharge of polychlorinated biphenyl compounds such as those commonly used for transformer fluid.

SPECIAL CONDITION 9. Ameren Energy Generating Company has complied with Section 302.211(f) of Title 35, Chapter 1, Subtitle C: Water Pollution Regulations by demonstrating that thermal discharge from the Meredosia Energy Center has not caused and cannot reasonably be expected to cause significant ecological damage to the Illinois River as approved by the IPCB in PCB 78-101 on November 16, 1978. Pursuant to 35 Ill. Adm. Code 302.211(g) no additional monitoring or modification is being required for reissuance of this NPDES permit.

Based on the arrangement prior to the modification, there is significantly less thermal loading to the Illinois River (10.3 MGD of non-contact cooling water versus over 200 MGD of non-contact cooling water in the previous arrangement).

SPECIAL CONDITION 10. Ameren Energy Generating Company's demonstration for the Meredosia Energy Center in accordance with Section 316(b) of the CWA was determined to meet BTA at the time of the demonstration, and was approved by this Agency by letter dated August 16, 1981.

SPECIAL CONDITION 11. Ameren Energy Generating Company design of the cooling water intake structure which consists of closed-cycle cooling affords Best Technology Available (BTA) in accordance with Section 316(b) of the CWA.

Special Conditions

SPECIAL CONDITION 12. If cooling tower maintenance chemicals contains chromium or zinc the cooling tower blowdown and cooling tower emergency overflow shall be monitored for these constituents once/week when discharge occurs by composite sample. The discharge of one hundred twenty-four priority pollutants (40 CFR 423 (Appendix A)) in cooling tower blowdown is prohibited if the pollutants come from cooling tower maintenance chemicals.

SPECIAL CONDITION 13. Any debris from the trash rack or intake screens shall not be returned to the river but shall be properly disposed of.

SPECIAL CONDITION 14. Samples taken in compliance with the effluent monitoring requirements shall be taken at a point representative of the discharge, but prior to entry into the receiving stream.

SPECIAL CONDITION 15. The Agency has determined that the effluent limitations in this permit constitute BAT/BCT for storm water which is treated in the existing treatment facilities for purposes of this permit reissuance, and no pollution prevention plan will be required for such storm water. In addition to the chemical specific monitoring required elsewhere in this permit, the permittee shall conduct an annual inspection of the facility site to identify areas contributing to a storm water discharge associated with industrial activity, and determine whether any facility modifications have occurred which result in previously-treated storm water discharges no longer receiving treatment. If any such discharges are identified the permittee shall request a modification of this permit within 30 days after the inspection. Records of the annual inspection shall be retained by the permittee for the term of this permit and be made available to the Agency on request.

SPECIAL CONDITION 16. The Permittee shall monitor the effluent from Outfalls 002, 003 and 004 for the following parameters on a 2/year basis. This Permit may be modified with public notice to establish effluent limitations if appropriate, based on information obtained through sampling. The sample shall be a 24-hour effluent composite except as otherwise specifically provided below and the results shall be submitted on the DMR's to IEPA. The parameters to be sampled and the minimum reporting limits to be attained are as follows:

STORET CODE	PARAMETER	Minimum reporting limit
10197	Antimony	5.0 ug/L
01002	Arsenic	0.05 mg/L
01007	Barium	0.5 mg/L
01027	Cadmium	0.001 mg/L
01032	Chromium (hexavalent) (grab)	0.01 mg/L
01034	Chromium (total)	0.05 mg/L
01042	Copper	0.005 mg/L
00718	Cyanide (weak acid dissociable) (grab)	5.0 ug/L
00720	Cyanide (total) (grab not to exceed 24-hour holding time)	5.0 ug/L
00951	Fluoride	0.1 mg/L
01045	Iron (total)	0.5 mg/L
01046	Iron (Dissolved)	0.5 mg/L
01051	Lead	0.05 mg/L
01055	Manganese	0.5 mg/L
01067	Nickel	0.005 mg/L
32730	Phenols (grab)	0.005 mg/L
01147	Selenium	0.005 mg/L
10159	Thallium	5.0 ug/L
01092	Zinc	0.025 mg/L

In addition to the testing listed above, outfall 002 shall also be tested for ammonia and chloride at the same interval. Also, outfalls 003 and 004 shall also be tested for sulfate and silver at the same interval.

Unless otherwise indicated, concentrations refer to the total amount of the constituent present in all phases, whether solid, suspended or dissolved, elemental or combined, including all oxidation states.

SPECIAL CONDITION 17. There shall be no discharge of complexed metal bearing waste streams and associated rinses from chemical metal cleaning unless this permit has been modified, subject to public notice and opportunity for hearing, to allow the new discharge.

SPECIAL CONDITION 18. The use or operation of this facility shall be by or under the supervision of a Certified Class K operator.

SPECIAL CONDITION 19. Allowed mixing is recognized for silver at outfall 002.

SPECIAL CONDITION 20. The permittee shall conduct biomonitoring of the effluent from Outfall 002. The permittee shall conduct biomonitoring of the effluent discharge within one year of the expiration date of this permit. The results shall be submitted with the permit renewal application.

Biomonitoring

1. Acute Toxicity - Standard definitive acute toxicity tests shall be run on at least two trophic levels of aquatic species (fish, invertebrate) representative of the aquatic community of the receiving stream. Except as noted here and in the IEPA document AEffluent Biomonitoring and Toxicity Assessment@, testing must be consistent with Methods for Measuring the Acute Toxicity of Effluents to Aquatic Organisms EPA-600/4-90-027. Unless substitute tests are pre-approved; the following tests are required:

    a. Fish - 96 hour static LC_{50} Bioassay using one to two week old fathead minnows (Pimephales promelas).

    b. Invertebrate 48-hour static LC_{50} Bioassay using Ceriodaphnia.

2. Testing Frequency - The above tests shall be conducted on a one time basis using 24-hour composite effluent samples unless otherwise authorized by the Agency. Results shall be reported according to EPA/600/4-90/027, Section 12, Report Preparation, and shall be submitted to IEPA with the renewal application.

3. Toxicity Assessment - Should the review of the results of the biomonitoring program identify toxicity, the Agency may require that the permittee prepare a plan for toxicity reduction evaluation and identification. This plan shall include an evaluation to determine which chemicals have a potential for being discharged in the plant wastewater, a monitoring program to determine their presence or absence and to identify other compounds which are not being removed by treatment, and other measures as appropriate.

    The Agency may modify this permit during its term to incorporate additional requirements or limitations based on the results of any biomonitoring. In addition, after review of the monitoring results, the Agency may modify this permit to include numerical limitations for specific toxic pollutants. Modifications under this condition shall follow public notice and opportunity for hearing.

SPECIAL CONDITION 21. The Permittee shall provide an analysis of the following to the Agency by May 1, 2016 for this permit:

1. The Permittee shall prepare a phosphorus removal Technical Feasibility Analysis specific to its discharge(s) to further reduce loading of phosphorus to levels equivalent to annual average discharges of 0.1 mg/L. This analysis shall address technical feasibility, cost-effectiveness, and potential benefits.

2. The Permittee shall determine if other potential technically feasible and cost-effective wastewater treatment strategies are available to reduce the volume or concentration of pollutants to be discharged by the FutureGen 2.0 Project.

Attachment H

Standard Conditions

Definitions

Act means the Illinois Environmental Protection Act, 415 ILCS 5 as Amended.

Agency means the Illinois Environmental Protection Agency.

Board means the Illinois Pollution Control Board.

Clean Water Act (formerly referred to as the Federal Water Pollution Control Act) means Pub. L 92-500, as amended. 33 U.S.C. 1251 et seq.

NPDES (National Pollutant Discharge Elimination System) means the national program for issuing, modifying, revoking and reissuing, terminating, monitoring and enforcing permits, and imposing and enforcing pretreatment requirements, under Sections 307, 402, 318 and 405 of the Clean Water Act.

USEPA means the United States Environmental Protection Agency.

Daily Discharge means the discharge of a pollutant measured during a calendar day or any 24-hour period that reasonably represents the calendar day for purposes of sampling. For pollutants with limitations expressed in units of mass, the "daily discharge" is calculated as the total mass of the pollutant discharged over the day. For pollutants with limitations expressed in other units of measurements, the "daily discharge" is calculated as the average measurement of the pollutant over the day.

Maximum Daily Discharge Limitation (daily maximum) means the highest allowable daily discharge.

Average Monthly Discharge Limitation (30 day average) means the highest allowable average of daily discharges over a calendar month, calculated as the sum of all daily discharges measured during a calendar month divided by the number of daily discharges measured during that month.

Average Weekly Discharge Limitation (7 day average) means the highest allowable average of daily discharges over a calendar week, calculated as the sum of all daily discharges measured during a calendar week divided by the number of daily discharges measured during that week.

Best Management Practices (BMPs) means schedules of activities, prohibitions of practices, maintenance procedures, and other management practices to prevent or reduce the pollution of waters of the State. BMPs also include treatment requirements, operating procedures, and practices to control plant site runoff, spillage or leaks, sludge or waste disposal, or drainage from raw material storage.

Aliquot means a sample of specified volume used to make up a total composite sample.

Grab Sample means an individual sample of at least 100 milliliters collected at a randomly-selected time over a period not exceeding 15 minutes.

24-Hour Composite Sample means a combination of at least 8 sample aliquots of at least 100 milliliters, collected at periodic intervals during the operating hours of a facility over a 24-hour period.

8-Hour Composite Sample means a combination of at least 3 sample aliquots of at least 100 milliliters, collected at periodic intervals during the operating hours of a facility over an 8-hour period.

Flow Proportional Composite Sample means a combination of sample aliquots of at least 100 milliliters collected at periodic intervals such that either the time interval between each aliquot or the volume of each aliquot is proportional to either the stream flow at the time of sampling or the total stream flow since the collection of the previous aliquot.

(1) **Duty to comply.** The permittee must comply with all conditions of this permit. Any permit noncompliance constitutes a violation of the Act and is grounds for enforcement action, permit termination, revocation and reissuance, modification, or for denial of a permit renewal application. The permittee shall comply with effluent standards or prohibitions established under Section 307(a) of the Clean Water Act for toxic pollutants within the time provided in the regulations that establish these standards or prohibitions, even if the permit has not yet been modified to incorporate the requirements.

(2) **Duty to reapply.** If the permittee wishes to continue an activity regulated by this permit after the expiration date of this permit, the permittee must apply for and obtain a new permit. If the permittee submits a proper application as required by the Agency no later than 180 days prior to the expiration date, this permit shall continue in full force and effect until the final Agency decision on the application has been made.

(3) **Need to halt or reduce activity not a defense.** It shall not be a defense for a permittee in an enforcement action that it would have been necessary to halt or reduce the permitted activity in order to maintain compliance with the conditions of this permit.

(4) **Duty to mitigate.** The permittee shall take all reasonable steps to minimize or prevent any discharge in violation of this permit which has a reasonable likelihood of adversely affecting human health or the environment.

(5) **Proper operation and maintenance.** The permittee shall at all times properly operate and maintain all facilities and systems of treatment and control (and related appurtenances) which are installed or used by the permittee to achieve compliance with conditions of this permit. Proper operation and maintenance includes effective performance, adequate funding, adequate operator staffing and training, and adequate laboratory and process controls, including appropriate quality assurance procedures. This provision requires the operation of back-up, or auxiliary facilities, or similar systems only when necessary to achieve compliance with the conditions of the permit.

(6) **Permit actions.** This permit may be modified, revoked and reissued, or terminated for cause by the Agency pursuant to 40 CFR 122.62 and 40 CFR 122.63. The filing of a request by the permittee for a permit modification, revocation and reissuance, or termination, or a notification of planned changes or anticipated noncompliance, does not stay any permit condition.

(7) **Property rights.** This permit does not convey any property rights of any sort, or any exclusive privilege.

(8) **Duty to provide information.** The permittee shall furnish to the Agency within a reasonable time, any information which the Agency may request to determine whether cause exists for modifying, revoking and reissuing, or terminating this permit, or to determine compliance with the permit. The permittee shall also furnish to the Agency upon request, copies of records required to be kept by this permit.

(9) **Inspection and entry**. The permittee shall allow an authorized representative of the Agency or USEPA (including an authorized contractor acting as a representative of the Agency or USEPA), upon the presentation of credentials and other documents as may be required by law, to:
  - (a) Enter upon the permittee's premises where a regulated facility or activity is located or conducted, or where records must be kept under the conditions of this permit;
  - (b) Have access to and copy, at reasonable times, any records that must be kept under the conditions of this permit;
  - (c) Inspect at reasonable times any facilities, equipment (including monitoring and control equipment), practices, or operations regulated or required under this permit; and
  - (d) Sample or monitor at reasonable times, for the purpose of assuring permit compliance, or as otherwise authorized by the Act, any substances or parameters at any location.

(10) **Monitoring and records**.
  - (a) Samples and measurements taken for the purpose of monitoring shall be representative of the monitored activity.
  - (b) The permittee shall retain records of all monitoring information, including all calibration and maintenance records, and all original strip chart recordings for continuous monitoring instrumentation, copies of all reports required by this permit, and records of all data used to complete the application for this permit, for a period of at least 3 years from the date of this permit, measurement, report or application. Records related to the permittee's sewage sludge use and disposal activities shall be retained for a period of at least five years (or longer as required by 40 CFR Part 503). This period may be extended by request of the Agency or USEPA at any time.
  - (c) Records of monitoring information shall include:
    - (1) The date, exact place, and time of sampling or measurements;
    - (2) The individual(s) who performed the sampling or measurements;
    - (3) The date(s) analyses were performed;
    - (4) The individual(s) who performed the analyses;
    - (5) The analytical techniques or methods used; and
    - (6) The results of such analyses.
  - (d) Monitoring must be conducted according to test procedures approved under 40 CFR Part 136, unless other test procedures have been specified in this permit. Where no test procedure under 40 CFR Part 136 has been approved, the permittee must submit to the Agency a test method for approval. The permittee shall calibrate and perform maintenance procedures on all monitoring and analytical instrumentation at intervals to ensure accuracy of measurements.

(11) **Signatory requirement**. All applications, reports or information submitted to the Agency shall be signed and certified.
  - (a) **Application**. All permit applications shall be signed as follows:
    - (1) For a corporation: by a principal executive officer of at least the level of vice president or a person or position having overall responsibility for environmental matters for the corporation:
    - (2) For a partnership or sole proprietorship: by a general partner or the proprietor, respectively; or
    - (3) For a municipality, State, Federal, or other public agency: by either a principal executive officer or ranking elected official.
  - (b) **Reports**. All reports required by permits, or other information requested by the Agency shall be signed by a person described in paragraph (a) or by a duly authorized representative of that person. A person is a duly authorized representative only if:
    - (1) The authorization is made in writing by a person described in paragraph (a); and
    - (2) The authorization specifies either an individual or a position responsible for the overall operation of the facility, from which the discharge originates, such as a plant manager, superintendent or person of equivalent responsibility; and
    - (3) The written authorization is submitted to the Agency.
  - (c) **Changes of Authorization**. If an authorization under (b) is no longer accurate because a different individual or position has responsibility for the overall operation of the facility, a new authorization satisfying the requirements of (b) must be submitted to the Agency prior to or together with any reports, information, or applications to be signed by an authorized representative.
  - (d) **Certification**. Any person signing a document under paragraph (a) or (b) of this section shall make the following certification:

    I certify under penalty of law that this document and all attachments were prepared under my direction or supervision in accordance with a system designed to assure that qualified personnel properly gather and evaluate the information submitted. Based on my inquiry of the person or persons who manage the system, or those persons directly responsible for gathering the information, the information submitted is, to the best of my knowledge and belief, true, accurate, and complete. I am aware that there are significant penalties for submitting false information, including the possibility of fine and imprisonment for knowing violations.

(12) **Reporting requirements**.
  - (a) **Planned changes**. The permittee shall give notice to the Agency as soon as possible of any planned physical alterations or additions to the permitted facility. Notice is required when:
    - (1) The alteration or addition to a permitted facility may meet one of the criteria for determining whether a facility is a new source pursuant to 40 CFR 122.29 (b); or
    - (2) The alteration or addition could significantly change the nature or increase the quantity of pollutants discharged. This notification applies to pollutants which are subject neither to effluent limitations in the permit, nor to notification requirements pursuant to 40 CFR 122.42 (a)(1).
    - (3) The alteration or addition results in a significant change in the permittee's sludge use or disposal practices, and such alteration, addition, or change may justify the application of permit conditions that are different from or absent in the existing permit, including notification of additional use or disposal sites not reported during the permit application process or not reported pursuant to an approved land application plan.
  - (b) **Anticipated noncompliance**. The permittee shall give advance notice to the Agency of any planned changes in the permitted facility or activity which may result in noncompliance with permit requirements.
  - (c) **Transfers**. This permit is not transferable to any person except after notice to the Agency.
  - (d) **Compliance schedules**. Reports of compliance or noncompliance with, or any progress reports on, interim and final requirements contained in any compliance schedule of this permit shall be submitted no later than 14 days following each schedule date.
  - (e) **Monitoring reports**. Monitoring results shall be reported at the intervals specified elsewhere in this permit.
    - (1) Monitoring results must be reported on a Discharge Monitoring Report (DMR).

(2) If the permittee monitors any pollutant more frequently than required by the permit, using test procedures approved under 40 CFR 136 or as specified in the permit, the results of this monitoring shall be included in the calculation and reporting of the data submitted in the DMR.

(3) Calculations for all limitations which require averaging of measurements shall utilize an arithmetic mean unless otherwise specified by the Agency in the permit.

(f) **Twenty-four hour reporting**. The permittee shall report any noncompliance which may endanger health or the environment. Any information shall be provided orally within 24-hours from the time the permittee becomes aware of the circumstances. A written submission shall also be provided within 5 days of the time the permittee becomes aware of the circumstances. The written submission shall contain a description of the noncompliance and its cause; the period of noncompliance, including exact dates and time; and if the noncompliance has not been corrected, the anticipated time it is expected to continue; and steps taken or planned to reduce, eliminate, and prevent reoccurrence of the noncompliance. The following shall be included as information which must be reported within 24-hours:

(1) Any unanticipated bypass which exceeds any effluent limitation in the permit.

(2) Any upset which exceeds any effluent limitation in the permit.

(3) Violation of a maximum daily discharge limitation for any of the pollutants listed by the Agency in the permit or any pollutant which may endanger health or the environment.

The Agency may waive the written report on a case-by-case basis if the oral report has been received within 24-hours.

(g) **Other noncompliance**. The permittee shall report all instances of noncompliance not reported under paragraphs (12) (d), (e), or (f), at the time monitoring reports are submitted. The reports shall contain the information listed in paragraph (12) (f).

(h) **Other information**. Where the permittee becomes aware that it failed to submit any relevant facts in a permit application, or submitted incorrect information in a permit application, or in any report to the Agency, it shall promptly submit such facts or information.

(13) **Bypass**.

(a) Definitions.

(1) Bypass means the intentional diversion of waste streams from any portion of a treatment facility.

(2) Severe property damage means substantial physical damage to property, damage to the treatment facilities which causes them to become inoperable, or substantial and permanent loss of natural resources which can reasonably be expected to occur in the absence of a bypass. Severe property damage does not mean economic loss caused by delays in production.

(b) Bypass not exceeding limitations. The permittee may allow any bypass to occur which does not cause effluent limitations to be exceeded, but only if it also is for essential maintenance to assure efficient operation. These bypasses are not subject to the provisions of paragraphs (13)(c) and (13)(d).

(c) Notice.

(1) Anticipated bypass. If the permittee knows in advance of the need for a bypass, it shall submit prior notice, if possible at least ten days before the date of the bypass.

(2) Unanticipated bypass. The permittee shall submit notice of an unanticipated bypass as required in paragraph (12)(f) (24-hour notice).

(d) Prohibition of bypass.

(1) Bypass is prohibited, and the Agency may take enforcement action against a permittee for bypass, unless:

(i) Bypass was unavoidable to prevent loss of life, personal injury, or severe property damage;

(ii) There were no feasible alternatives to the bypass, such as the use of auxiliary treatment facilities, retention of untreated wastes, or maintenance during normal periods of equipment downtime. This condition is not satisfied if adequate back-up equipment should have been installed in the exercise of reasonable engineering judgment to prevent a bypass which occurred during normal periods of equipment downtime or preventive maintenance; and

(iii) The permittee submitted notices as required under paragraph (13)(c).

(2) The Agency may approve an anticipated bypass, after considering its adverse effects, if the Agency determines that it will meet the three conditions listed above in paragraph (13)(d)(1).

(14) **Upset**.

(a) Definition. Upset means an exceptional incident in which there is unintentional and temporary noncompliance with technology based permit effluent limitations because of factors beyond the reasonable control of the permittee. An upset does not include noncompliance to the extent caused by operational error, improperly designed treatment facilities, inadequate treatment facilities, lack of preventive maintenance, or careless or improper operation.

(b) Effect of an upset. An upset constitutes an affirmative defense to an action brought for noncompliance with such technology based permit effluent limitations if the requirements of paragraph (14)(c) are met. No determination made during administrative review of claims that noncompliance was caused by upset, and before an action for noncompliance, is final administrative action subject to judicial review.

(c) Conditions necessary for a demonstration of upset. A permittee who wishes to establish the affirmative defense of upset shall demonstrate, through properly signed, contemporaneous operating logs, or other relevant evidence that:

(1) An upset occurred and that the permittee can identify the cause(s) of the upset;

(2) The permitted facility was at the time being properly operated; and

(3) The permittee submitted notice of the upset as required in paragraph (12)(f)(2) (24-hour notice).

(4) The permittee complied with any remedial measures required under paragraph (4).

(d) Burden of proof. In any enforcement proceeding the permittee seeking to establish the occurrence of an upset has the burden of proof.

(15) **Transfer of permits**. Permits may be transferred by modification or automatic transfer as described below:

(a) Transfers by modification. Except as provided in paragraph (b), a permit may be transferred by the permittee to a new owner or operator only if the permit has been modified or revoked and reissued pursuant to 40 CFR 122.62 (b) (2), or a minor modification made pursuant to 40 CFR 122.63 (d), to identify the new permittee and incorporate such other requirements as may be necessary under the Clean Water Act.

(b) Automatic transfers. As an alternative to transfers under paragraph (a), any NPDES permit may be automatically transferred to a new permittee if:

(1) The current permittee notifies the Agency at least 30 days in advance of the proposed transfer date;

(2) The notice includes a written agreement between the existing and new permittees containing a specified date for transfer of permit responsibility, coverage and liability between the existing and new permittees; and

(3) The Agency does not notify the existing permittee and the proposed new permittee of its intent to modify or revoke and reissue the permit. If this notice is not received, the transfer is effective on the date specified in the agreement.

(16) All manufacturing, commercial, mining, and silvicultural dischargers must notify the Agency as soon as they know or have reason to believe:

(a) That any activity has occurred or will occur which would result in the discharge of any toxic pollutant identified under Section 307 of the Clean Water Act which is not limited in the permit, if that discharge will exceed the highest of the following notification levels:

(1) One hundred micrograms per liter (100 ug/l);

(2) Two hundred micrograms per liter (200 ug/l) for acrolein and acrylonitrile; five hundred micrograms per liter (500 ug/l) for 2,4-dinitrophenol and for 2-methyl-4,6 dinitrophenol; and one milligram per liter (1 mg/l) for antimony.

(3) Five (5) times the maximum concentration value reported for that pollutant in the NPDES permit application; or

(4) The level established by the Agency in this permit.

(b) That they have begun or expect to begin to use or manufacture as an intermediate or final product or byproduct any toxic pollutant which was not reported in the NPDES permit application.

(17) All Publicly Owned Treatment Works (POTWs) must provide adequate notice to the Agency of the following:

(a) Any new introduction of pollutants into that POTW from an indirect discharge which would be subject to Sections 301 or 306 of the Clean Water Act if it were directly discharging those pollutants; and

(b) Any substantial change in the volume or character of pollutants being introduced into that POTW by a source introducing pollutants into the POTW at the time of issuance of the permit.

(c) For purposes of this paragraph, adequate notice shall include information on (i) the quality and quantity of effluent introduced into the POTW, and (ii) any anticipated impact of the change on the quantity or quality of effluent to be discharged from the POTW.

(18) If the permit is issued to a publicly owned or publicly regulated treatment works, the permittee shall require any industrial user of such treatment works to comply with federal requirements concerning:

(a) User charges pursuant to Section 204 (b) of the Clean Water Act, and applicable regulations appearing in 40 CFR 35;

(b) Toxic pollutant effluent standards and pretreatment standards pursuant to Section 307 of the Clean Water Act; and

(c) Inspection, monitoring and entry pursuant to Section 308 of the Clean Water Act.

(19) If an applicable standard or limitation is promulgated under Section 301(b)(2)(C) and (D), 304(b)(2), or 307(a)(2) and that effluent standard or limitation is more stringent than any effluent limitation in the permit, or controls a pollutant not limited in the permit, the permit shall be promptly modified or revoked, and reissued to conform to that effluent standard or limitation.

(20) Any authorization to construct issued to the permittee pursuant to 35 Ill. Adm. Code 309.154 is hereby incorporated by reference as a condition of this permit.

(21) The permittee shall not make any false statement, representation or certification in any application, record, report, plan or other document submitted to the Agency or the USEPA, or required to be maintained under this permit.

(22) The Clean Water Act provides that any person who violates a permit condition implementing Sections 301, 302, 306, 307, 308, 318, or 405 of the Clean Water Act is subject to a civil penalty not to exceed $25,000 per day of such violation. Any person who willfully or negligently violates permit conditions implementing Sections 301, 302, 306, 307, 308, 318 or 405 of the Clean Water Act is subject to a fine of not less than $2,500 nor more than $25,000 per day of violation, or by imprisonment for not more than one year, or both. Additional penalties for violating these sections of the Clean Water Act are identified in 40 CFR 122.41 (a)(2) and (3).

(23) The Clean Water Act provides that any person who falsifies, tampers with, or knowingly renders inaccurate any monitoring device or method required to be maintained under this permit shall, upon conviction, be punished by a fine of not more than $10,000, or by imprisonment for not more than 2 years, or both. If a conviction of a person is for a violation committed after a first conviction of such person under this paragraph, punishment is a fine of not more than $20,000 per day of violation, or by imprisonment of not more than 4 years, or both.

(24) The Clean Water Act provides that any person who knowingly makes any false statement, representation, or certification in any record or other document submitted or required to be maintained under this permit, including monitoring reports or reports of compliance or non-compliance shall, upon conviction, be punished by a fine of not more than $10,000 per violation, or by imprisonment for not more than 6 months per violation, or by both.

(25) Collected screening, slurries, sludges, and other solids shall be disposed of in such a manner as to prevent entry of those wastes (or runoff from the wastes) into waters of the State. The proper authorization for such disposal shall be obtained from the Agency and is incorporated as part hereof by reference.

(26) In case of conflict between these standard conditions and any other condition(s) included in this permit, the other condition(s) shall govern.

(27) The permittee shall comply with, in addition to the requirements of the permit, all applicable provisions of 35 Ill. Adm. Code, Subtitle C, Subtitle D, Subtitle E, and all applicable orders of the Board or any court with jurisdiction.

(28) The provisions of this permit are severable, and if any provision of this permit, or the application of any provision of this permit is held invalid, the remaining provisions of this permit shall continue in full force and effect.

Illinois Pollution Control Board
R2014-10

T. Barkley: Exhibit O

COMMONWEALTH OF MASSACHUSETTS
EXECUTIVE OFFICE OF ENVIRONMENTAL AFFAIRS
DEPARTMENT OF ENVIRONMENTAL PROTECTION
ONE WINTER STREET, BOSTON, MA 02108 617-292-5500

ARGEO PAUL CELLUCCI
Governor

JANE SWIFT
Lieutenant Governor

BOB DURAND
Secretary

LAUREN A. LISS
Commissioner

OCT - 4 2000

In the Matter of
USGen New England, Inc.

ADMINISTRATIVE CONSENT ORDER

Order # ACO-BO-00-2002

I. The Parties

A. The Department of Environmental Protection (the "Department") maintains offices at One Winter Street, Boston, Massachusetts 02108; 205A Lowell Street, Wilmington, Massachusetts 01887; and 20 Riverside Drive, Lakeville, Massachusetts 02347. The Department is responsible for implementing the provisions of the Massachusetts Clean Waters Act, G.L.c. 21, the Solid Waste Management Act, G.L.c. 111, sec. 150A, the Oil and Hazardous Material Release Prevention and Response Act, G.L.c. 21E, and the regulations promulgated under each of them.

B. USGen New England, Inc. ("USGen") owns and operates the electric power generating stations located in Somerset and Salem, Massachusetts, known as Brayton Point Station and Salem Harbor Station, respectively (the "Stations").

II. Statement of Facts

A. Each Station operates an industrial wastewater treatment system, which includes one or more unlined treatment basins, pursuant to 314 CMR 5.17, various state and local regulatory approvals, and Memoranda of Agreement entered into between the Department and USGen on July 17 and 22, 1998.

B. In 1983, each Station filed an application with the Department for a groundwater discharge permit for the unlined basins. These applications are still pending at the Department. In accordance with 314 CMR 5.17 and Memoranda of Agreement between the Department and USGen dated July 17 and 22, 1998, the Stations have been authorized to operate their wastewater treatment systems while the applications remain pending at the Department.

C. The U.S. Environmental Protection Agency ("EPA"), the Department, and the Conservation Law Foundation ("CLF") have raised questions about the use of unlined basins for treatment of combustion wastes. At Brayton Point Station, such wastes include oil fly ash sluicewater, decant water from the bottom coal ash and oil ash ponds, washwater (from boiler, precipitator, stack, and air preheater cleaning), other plant wastewaters (coal pile runoff and floor drains), and stormwater. At Salem Harbor Station, such wastes include oil fly ash, coal pile runoff, and washwater (from cleaning of boiler, air preheater, and stack).

D. At Brayton Point Station, there are a number of closed (Nos. 1 through 9) and active (Nos. 10 and 10A) lined landfill cells for the management of combustion wastes which include solids dredged from the basins. The landfill cells are operated and monitored under state and local permits. The two active cells are currently expected to be capped and closed in approximately 2005.

E. USGen has been conducting a Phase II Comprehensive Site Assessment ("CSA") of conditions associated with the historic and current management of ash at Brayton Point Station, including the unlined basin and the landfill cells, under the Massachusetts Contingency Plan (310 CMR 40.000) and Solid Waste Management regulations (310 CMR 19.00). USGen expects to submit its Phase II CSA Report to the Department by September 30, 2000.

F. On April 18, 2000, CLF provided a ninety day written notice (the "Notice") to EPA, the Department, and PG&E Generating Company and related entities, including USGen New England, Inc. (PG&E Generating Company and its related entities are herein collectively referred to as "USGen"), of its intention to file an action under the citizen suit provision of the Resource Conservation and Recovery Act ("RCRA"), 42 U.S.C. § 6972(a)(1)(B). The Notice alleges that USGen's operation of Salem Harbor and Brayton Point Stations, including the unlined wastewater treatment basins and the landfill cells, may present an imminent and substantial endangerment to human health and the environment. Based on sampling activities and risk evaluations performed by independent environmental consultants, USGen denies that its operation of the Stations may present an imminent and substantial endangerment to human health or the environment.

G. The Department has been regulating and will continue to regulate many aspects of the operations at the Stations, including the wastewater treatment systems and the landfill cells at issue in the CLF Notice and is therefore taking the lead in enforcement of these matters to ensure consistent application and interpretation of its policies and regulations.

H. The Department and USGen agree that settlement of this matter is in the public interest and that this Administrative Consent Order ("ACO") is the most appropriate means of resolving the Stations' outstanding applications for groundwater discharge permits and the matters raised by the CLF Notice.

III. Disposition and Order

A. Termination of Discharge to Unlined Wastewater Treatment Basins and Alteration of Existing Wastewater Treatment Facilities

The parties hereby agree that discharges of wastewater to the four unlined wastewater treatment basins located at Salem Harbor Station and to the one unlined treatment basin located at Brayton Point Station shall cease on the schedule delineated below.

1. At Salem Harbor Station, USGen shall:

   a. Within 30 days of the effective date of this ACO, submit to the Department for approval, a written plan to alter its existing Wastewater Treatment Facility ("WWT") Facility. Such Plan shall provide for replacement of the unlined treatment basins with aboveground tanks and for installation of pumps and piping necessary to effect this alteration of the existing WWT Facility.

   b. On or before October 15, 2000, cease its discharge of wastewater from the oil Fly Ash Recycle ("FAR") system to the unlined treatment basins. USGen shall provide the Department with a written description of the replacement system. Within 30 days after ceasing the discharge of wastewater from the FAR system to the unlined treatment basins, USGen shall analyze representative samples of the existing wastewater treatment system influent and effluent for the parameters listed in Exhibit A. If the Department believes pollutants other than those listed in Exhibit A are present in the wastewater as the result of power generating activities it may require them to be quantified. Results will be reported to the Department and EPA as an update to the NPDES permit renewal application.

   c. On or before the later of January 15, 2001 or 135 days after receiving Department approval of the Plan to alter the existing WWT Facility, construct and operate the approved alteration and cease the discharge of all wastewater to the unlined treatment basins.

   d. Within 45 days of commencing operation of the altered WWT Facility, analyze the influent and effluent for the list of parameters set forth on Exhibit A to this ACO and submit the results to DEP and EPA as an update to the pending NPDES permit renewal application. The influent samples shall be collected at historical locations. In addition, prior to the issuance of the NPDES Permit, USGen shall collect a representative sample of the WWT Facility influent and effluent during a boiler washing for the pollutants listed in Appendix A. USGen shall collect this sample during the first boiler washing once the altered WWT Facility is operational. If USGen does not conduct a boiler washing within twelve months of commencing operation of the altered WWT Facility or prior to the issuance of the final NPDES permit, whichever comes first, it shall collect a representative sample of the daily influent and effluent as a substitute. The Department reserves the right under this section to require USGen to collect additional effluent samples prior to the issuance of the Draft NPDES Permit for the analysis of pollutants listed in, but not limited to, Appendix A. Results will be reported to the Department and EPA as an update to the NPDES Permit renewal application. The Department and EPA will determine, in the NPDES and related state permitting processes, effluent limits and monitoring requirements based on the NPDES permit renewal application as supplemented under this ACO or other relevant information.

2. At Brayton Point Station, USGen shall:

a. Within 30 days of the effective date of this ACO submit to the Department a written plan to alter its existing WWT Facility. Such Plan shall provide for the replacement of the unlined treatment basin (known as Basin No. 3) with one or more aboveground tanks and for installation of pumps and piping necessary to effect this alteration of the existing WWT Facility.

b. On or before the later of November 15, 2000 or 60 days after receiving Department approval of the plan to alter the existing WWT Facility, cease the discharge of all wastewater to the unlined treatment Basin No. 3; provided, however, that treated wastewater from Basin No. 2 may be used to help sluice and remove accumulated solids from within Basin No. 3 and to clean rip-rap within Basin No. 3 which activities, depending on when winter conditions set in, may take until approximately April 30, 2001 to complete.

c. Within 45 days of commencing operation of the altered WWT Facility, analyze the influent and effluent for the list of parameters set forth on Exhibit A to this ACO and submit the results to DEP and EPA as an update to the pending NPDES permit renewal application. The influent sample for the initial sampling shall be collected at the outfall from Basin 2. All other influent samples shall be collected at historical locations. In addition, prior to the issuance of the NPDES Permit, USGen shall collect a representative sample of the WWT Facility influent and effluent during a boiler washing for the pollutants listed in Appendix A. USGen shall collect this sample during the first boiler washing once the altered WWT Facility is operational. If USGen does not conduct a boiler wash within twelve months of commencing operation of the altered WWT Facility or prior to the issuance of the final NPDES permit, whichever comes first, it shall collect a representative sample of the daily effluent as a substitute. The Department reserves the right under this section to require USGen to collect additional effluent samples prior to the issuance of the Draft NPDES Permit for analysis of pollutants listed in, but not limited to, Appendix A. The Department and EPA will determine, in the NPDES and related state permitting processes, effluent limits and monitoring requirements based on the NPDES permit renewal application as supplemented under this ACO or other relevant information.

3. The Department will make all reasonable efforts to complete its review of the WWT Facility Plans within 30 days.

4. USGen shall provide all regulatory notices and obtain any state, federal, or local approvals that may be required to alter the wastewater treatment systems in order to replace the unlined basins at the Stations.

5. USGen shall comply with existing NPDES Permits ; MA0005096 [Salem] and MAD055179634 [Brayton Point] during and following closure of the unlined treatment basins.

B. <u>Removal of Accumulated Solids from within the Unlined Treatment Basins</u>

1. At Salem Harbor Station, USGen shall:

   a. Within 30 days of the termination of discharge to the unlined treatment basins, submit a Closure Plan for removal of accumulated solids from within the unlined treatment basins to the Department for approval. The Closure Plan shall include, but not be limited to, a plan for the following:

      1. Characterization and estimation of the amount of solids within the unlined basins in order to define the volume of material, and the manner in which it is to be removed, down to the underlying soils and rip rap. In addition, identify a suitable location for solids disposal.

      2. On-site waste management practices during closure to ensure there is no release of contaminants to the environment.

3. Sampling of soils beneath the basins to determine the need for further assessment and/or remediation which, if necessary, shall be carried out pursuant to Section III. C., below.

b. Implement and complete the Closure Plan activities within 120 days of the Department's approval of the Closure Plan. It is anticipated that this approval date will be on or around July 15, 2001. USGen may request an extension to the schedule from the Department no less than 30 days from the closure deadline.

c. Within 60 days of completion of the Closure Plan activities, submit a Closure Report to Department.

d. The solids are considered a special waste pursuant to 310 CMR 19.161 (3) and therefore shall be disposed of in a facility approved to receive such waste. USGen shall characterize the waste as required by the receiving facility and obtain any applicable waste disposal permits necessary for proper disposal

2. At Brayton Point Station Basin, U. S. Gen shall:

a. Within 30 days of the effective date of this ACO submit a Closure Plan for removal of solids from within Basin No. 3 to the Department for approval. The Closure Plan shall include, but not be limited to, a plan for the following:

1. Characterization and estimation of the amount of solids within the unlined basins in order to define the volume of material, and the manner in which it is to be removed, down to the underlying soils and rip rap. In addition, identify a suitable location for solids disposal.

2. On-site waste management practices during closure to ensure there is no release of contaminants to the environment.

3. Sampling soils beneath Basin No. 3 to determine the need for further assessment and/or remediation which, if necessary, shall be carried out pursuant to Section III. C. below.

b. USGen shall implement and complete Closure Plan activities within 180 days of the Department's approval of the Closure Plan. USGen may request an extension to the schedule from the Department no less than 30 days from the closure deadline.

c. Within 60 days of completion of the Closure Plan activities, USGen shall submit a Closure Report to the Department.

d. The solids are considered a special waste pursuant to 310 CMR 19.161 (3) and therefore shall be disposed of in a facility approved to receive such waste. USGen shall characterize the waste as required by the receiving facility and obtain any applicable waste disposal permits necessary for proper disposal.

3. The Department will make all reasonable efforts to complete its review of the Closure Plans within 30 days of their receipt.

C. <u>Assessment and Remediation Activities</u>

1. At Salem Harbor Station, USGen shall:

a. Within 60 days of the termination of the discharge to the treatment basins, submit a Phase I Equivalent Scope of Work ("SOW") for the assessment of soils and ground water associated with the unlined treatment basins. The SOW shall include, but not be limited to, the following:

1. Locations and proposed depths of soil samples and ground water monitoring wells, sampling parameters and methodologies, and monitoring well construction.

2. Establishment of site background conditions.

b. Within 120 days of the Department's approval of the SOW, submit a Site Assessment Report to the Department. Data shall be presented in written narrative and graphical format. Data shall be available in electronic format. This report shall detail the results of the assessment activities and determine if a Reportable Concentration ("RC") according to 310 CMR 40.0300 has been exceeded. If a RC has been exceeded, USGen shall notify the Department in accordance with 310 CMR 40.0300 and comply with the requirements of the MCP, 310 CMR 40.0000.

c. Collect groundwater samples from the installed monitoring wells for a period of six quarters beginning no later than June 30, 2001 and analyze them for parameters prescribed in the SOW.

2. At Brayton Point Station, USGen shall:

a. Complete its Phase II Comprehensive Site Assessment Report in accordance with the MCP and submit ~~the~~ report to the Department on or before September 30, 2000. ✓ Submitted

b. Based on the results of the Phase II Comprehensive Site Assessment Report, the soil sampling described in Paragraph B.2, above, and the standards for achieving a Response Action Outcome in accordance with 310 CMR 40.1000 Subpart J of the MCP, USGen will determine whether remediation attributable to conditions associated with Basin No. 3 is necessary. This determination will be subject to DEP approval . If such remediation is determined to be necessary, a proposed remediation plan shall be submitted to the Department no later than 30 days from the submittal of the Closure Report in Section B.2.c. above. Such plan shall include the information required in 310 CMR 40.0850 (Phase III). This includes a description of the proposed remediation, remedial goals/end points, and schedule for implementation. DEP comment

D. Brayton Point - Closure of Landfill Cells 10 and 10A

1. USGen shall conform to a schedule, and otherwise comply with the requirements of 310 CMR 19.00, for capping and closure of Landfill Cells 10 and 10A as follows:

   a. A closure plan for one of the cells shall be submitted to the Department for approval on or before April 1, 2001.

   b. A closure plan for the other cell shall be submitted to the Department for approval on or before January 1, 2002.

   c. The closure shall be in accordance with the approved plan.

2. Implementation of the landfill cell closure plans shall be completed in accordance with 310 CMR 19.140 and the permits previously issued by the Department for Landfill Cells 10 and 10A pursuant to the Solid Waste Management Act, M.G.L. ch. 111, §150A.

3. Pursuant to 310 CMR 19.132 USGen shall continue to monitor the ground water according to its permit requirements.

E. Withdrawal of Groundwater Discharge Permit Applications

1. Within ninety (90) days of the date on which accumulated solids have been removed from the unlined basins pursuant to Section III. B., above, USGen shall withdraw the pending groundwater discharge permit applications.

2. This agreement to withdraw the pending applications shall not constitute a loss of interim status for either Station prior to the date on which the Station's application is withdrawn.

3. USGen shall continue to monitor the ground water at the Stations according to the current sampling and analysis plans until modified by the Department.

F. **Public Participation**

1. Salem Harbor Station is not currently regulated by the MCP and is, therefore, not subject to the public involvement plan ("PIP") provisions set forth at 310 CMR 40.1400. Brayton Point Station has been classified as a Tier II site under the MCP; and will comply with the PIP provisions of the MCP. Nonetheless, USGen agrees to provide for public participation and input as specified below:

    a. **Brayton Point:**

        1. Nothing in this ACO shall limit or replace the MCP Public Involvement Plan procedure currently in effect at the Brayton Point Facility, outlined at 310 CMR 40.000.

        2. The WWT Plans and Closure Plans for the treatment basin will be placed in the public information repositories, identified as the Somerset, Fall River, and Westport Libraries, during the Department's review period. USGen shall not be deemed in violation of this ACO for failure to comply with this requirement to the extent that the review period partially or entirely occurs prior to the effective date of this ACO.

    b. **Salem Harbor:**

    Public involvement at the Salem Harbor Facility ("Facility") shall include the following:

        1. Contact Person: A person directly involved in the oversight for the Facility shall be designated as the contact person, and the name, phone number, electronic mail address and mail address for the contact person shall be provided to CLF, HealthLink, and the public.

        2. Site Information: USGen shall make background information about the Facility available to the public repositories identified in Section III F.1.b.5 (d) below. The information provided shall include, but is not limited to, a site description and history and history of environmental

site assessments under the MCP.

3. Milestones: A schedule of milestones covered under this ACO shall be established by the Department for the Facility. At appropriate milestones, to be determined by DEP, USGen will set up public meetings with the Department at which USGen will explain the status of its activities under this ACO and answer questions from the public regarding its activities. Public notice must be published in the Salem Evening News and the Beverly Citizen.

4. Publicly Available Documents: The WWT Plans and Closure Plans for the treatment basins shall be placed in the public information repositories identified in Section III F.1.b.5 (d) below during the Department's review period. In addition, any sediment, ground water, and wastewater monitoring data submitted to the Department that is not otherwise provided to the repository pursuant to Section III F.1.b.5 below, shall be placed in the public information repositories at the time of their submittal. USGen shall not be deemed in violation of this ACO for failure to comply with this requirement to the extent that the review period partially or entirely occurs prior to the effective date of this ACO.

5. Submissions and Comments: The following actions shall be taken by USGen upon submittal of the Phase I Equivalent Report, Closure Report, and Phase I Equivalent Scope of Work to the Department pursuant to this ACO:

   a. Copies of all reports or documents described in Section III.F.1.b.5 of this ACO shall be submitted to CLF, HealthLink, and both the Chief Municipal Officer and the Salem Board of Health;

   b. If USGen proposes to conduct any remediation action pursuant to the Massachusetts Contingency Plan, 310 CMR 40.000, the document, plan or report shall be submitted to CLF, HealthLink, and both the Chief Municipal Officer and the Salem Board of Health no less than 30 days before the proposed implementation of such remediation;

   c. Notice of submittal of any document or report described in Section III.F.1.b.5 of this ACO shall be printed in the Salem Evening News and the Beverly

Citizen.

d. Copies of all reports or documents described in Section III.F.1.b.5 of this ACO shall be made publicly available at the Salem, Beverly, Swampscott and Abbott (Marblehead) public libraries;

e. A 20-day public review and comment period shall be established by the Department for the Phase I Equivalent Report, Closure Report and Phase I Equivalent Scope of Work. Upon the request of ten or more citizens, DEP may extend the public comment period.

f. Summary: At the end of each comment period established under Section 5(e) above, USGen shall prepare a summary of public comments received. This summary shall contain the comments received and shall note which comments have been incorporated and provide an explanation of why others have not.

2. Response to Comments; The Department and USGen shall consider public comments received regarding any action taken in connection with this ACO.

G. Notices

All submission of documents or notices required by this ACO shall be sent to the following addresses:

1. Jeff Chormann, Bureau of Waste Prevention
Department of Environmental Protection
One Winter Street, 9th Floor
Boston, MA 02108

With a copy to:

For Salem Harbor
William Gaughan
DEP Northeast Regional Office
205A Lowell Street
Wilmington, MA 01887

For Brayton Point

Paul Taurasi
DEP Southeast Regional Office
20 Riverside Drive
Lakeville, MA 02347

2. Sanford Hartman, Esq.
USGen New England, Inc.
7500 Old Georgetown Road
Bethesda, MD 20814-6161

With copies to

Wendy B. Jacobs, Esq.
Foley, Hoag & Eliot, LLP
One Post Office Square
Boston, MA 02109

Barry Ketschke
General Manager
Brayton Point Station
Brayton Road
P.O. Box 440
Somerset, MA 02726

Michael Fitzgerald
General Manager
Salem Harbor Station
24 Fort Avenue
Salem, MA 01970

3. Carol Lee Rawn

Staff Attorney
Conservation Law Foundation
62 Summer Street
Boston, MA 02110-1016

H. Force Majeure

USGen's noncompliance with one or more of the provisions of this ACO may be excused to the extent and for the duration that noncompliance is caused by a "force majeure" event. For purposes of this ACO, "force majeure" is defined as an event beyond the reasonable control of USGen that could not have been prevented by due diligence. Examples of a force majeure event include, but are not limited to, delays in shipment of equipment by suppliers; failure of a regulatory agency to issue a necessary permit; delays attributable to appeals of necessary permits; acts of God; acts of war; unanticipated delays due to accidents, strikes, freight embargoes, or other work stoppages; and flood, fire, extreme weather conditions or other natural disasters.

If USGen anticipates an inability to comply with any of the provisions of this Decree due to a "force majeure" event, or if such event occurs that could not have been anticipated, USGen shall notify the Department within seven (7) days in writing for anticipated events, and within 24 hours (orally) and seven (7) days (in writing) after any unanticipated events, of the nature, cause and anticipated length of the delay and all steps which USGen has taken and will take, with a schedule for their implementation, to avoid or minimize the delay. Unreasonable failure to provide this written notice shall constitute a waiver of USGen's right to invoke the provisions of this Section as a basis for delay of performance under this ACO. If the Department and USGen agree that the delay was attributable to a "force majeure" event, they shall, by written agreement, stipulate to an extension to the relevant performance schedule.

If the parties do not agree that the delay was caused by a "force majeure" event, or are unable to informally agree on a stipulated extension of time, the Department's position shall control unless USGen petitions a court for relief. In submitting the matter to court, USGen shall have the burden of proving that the delay was attributable to a "force majeure" event, that it has exercised due diligence in minimizing the delay, and that, as a result of the delay, a particular extension is appropriate.

I. **Dispute Resolution**

In the event the parties cannot resolve any dispute with respect to the meaning or implementation of this ACO, then the interpretation advanced by the Department shall be considered binding unless USGen invokes the dispute resolution provisions of this Section.

If in the opinion of either USGen or the Department there is a dispute with respect to the meaning or implementation of this ACO, that party shall within thirty (30) days of identifying the matter in dispute send a written notice to the other party which outlines the nature of the dispute. Any such dispute shall in the first instance be the subject of informal negotiations between the parties. That period of informal negotiations shall not extend beyond thirty (30) days from the date when the notice was sent unless the parties agree otherwise.

If informal negotiations are unsuccessful, the Department's position shall control unless USGen files with a court a petition describing the nature of the dispute and proposing a resolution. USGen's petition must be filed within fifteen days after termination of informal negotiations. The Department shall then have twenty days to respond to the petition.

J. **Effect of ACO**

Compliance with this ACO shall be deemed to satisfy USGen's obligations to the Department for all claims alleged in the CLF Notice.

This ACO shall not relieve USGen from its obligations to comply with any Federal or state law, regulation or permit. Nothing in this ACO shall preclude USGen from applying to regulatory agencies for licenses, approvals, permits or modifications to licenses, approvals, or permits.

This ACO shall not constitute evidence in any proceeding, except in a proceeding to enforce the provisions of this ACO or in any proceeding regarding the meaning of a provision of the ACO, nor an admission or adjudication with respect to any allegation of the CLF Notice or any fact or conclusion of law with respect to any matter alleged in or arising out of the CLF Notice.

This ACO shall apply to USGen, its officers, employees, agents, successors, assigns, contractors, and consultants. USGen shall not violate this ACO and shall not allow or suffer its officers, employees, agents, contractors, consultants, successors or assigns to violate this ACO. A violation of this ACO by any of the foregoing shall constitute a violation by USGen.

K. <u>Retention of Rights</u>

Except as specifically provided herein, the Department does not waive any rights or remedies available to it for any violation by USGen of Federal or state laws or regulations. This Consent Order shall not be construed as, or operate as, barring, diminishing, adjudicating or in any way affecting any legal or equitable right of the Department with respect to approvals required by this Consent Order.

L. <u>Termination</u>

USGen shall submit to the Department a certification representing that all measures required by this ACO have been completed in full satisfaction of the requirements of this ACO. Within thirty (30) days of receipt of said certification, the Department shall inform USGen whether in the Department's judgment the terms of this ACO have been fully satisfied. If the Department agrees with USGen, the ACO shall be deemed terminated. If the Department disagrees with USGen, or fails to respond within the 30-day period, the parties shall meet informally for a reasonable period of time, after which time, if resolution has not been reached, USGen may petition a court for termination of the ACO.

M. Severability

If any term or provision of this ACO, or its application thereof to any person or circumstance shall to any extent be invalid or unenforceable, the remainder of this ACO shall not be affected thereby, and each remaining term and provision shall be valid and enforceable to the fullest extent permitted by law, provided, however that the Department may in its sole discretion, elect to void the entire ACO in the event of such invalidity or unenforceability.

N. Entire Agreement

This constitutes the entire understanding and agreement between the Department and USGen with respect to the subject matter of this ACO.

Each of the undersigned represents that she/he has the authority to sign this ACO and to legally bind himself and/or the party on whose behalf such representative is signing. This ACO shall take effect on the date that it is signed by the Department.

USGEN NEW ENGLAND, INC.

By:

Typed Name: E. K. Hauser

Title: Vice President

Date: 9/15/00

DEPARTMENT OF ENVIRONMENTAL PROTECTION

By: James C. Colman

Typed Name: JAMES C. COLMAN

Title: ASSISTANT COMMISSIONER

Date: 9/14/00

EXHIBIT A TO ACO

Metals

Aluminum

Antimony

Arsenic

Barium

Beryllium

Boron

Cadmium

Chromium VI

Copper

Iron

Lead

Manganese

Mercury

Nickel

Selenium

Silver

Strontium

Thallium

Vanadium

Zinc

PAHs:

Acenaphthene

Acenaphthylene

Anthracene

Benzo (a) Anthracene

Benzo (a) Pyrene

3,4-Benzofluoranthene

Benzo (ghi) Perylene

Benzo (k) Fluoranthene

2-Chloronaphthalene

Chrysene

Dibenzo (a,h) Anthracene

Fluoranthene

Fluorene

Indeno (1,2,3-cd) Pyrene

Naphthalene

Phenanthrene

Pyrene

Nutrients:

Nitrate

Sulfate

Illinois Pollution Control Board
R2014-10

T. Barkley: Exhibit P

IN THE UNITED STATES DISTRICT COURT
DISTRICT OF SOUTH CAROLINA
COLUMBIA DIVISION

CATAWBA RIVERKEEPER FOUNDATION, INC.	)	
PLAINTIFF,	)	**CASE NO. 3:12-CV-00124-JFA**
V.	)	
SOUTH CAROLINA ELECTRIC & GAS COMPANY, A SUBSIDIARY OF SCANA CORPORATION,	)	
DEFENDANT.	)	

SETTLEMENT AGREEMENT AND RELEASE

This Settlement Agreement and Release ("Agreement") is entered this 17th day of August 2012, between The Catawba Riverkeeper Foundation, Inc. ("Riverkeeper") and South Carolina Electric & Gas Company ("SCE&G"), and their respective successors, predecessors, assigns, affiliates, parent companies, subsidiaries, shareholders, officers, directors, agents, and employees.

RECITALS

A. WHEREAS, there is now pending a lawsuit brought by Riverkeeper against SCE&G in the United States District Court for the District of South Carolina, Civil Action No. 3:12-cv-00124-JFA (the "Action"); and

B. WHEREAS, Riverkeeper's Complaint in the Action alleges that SCE&G has violated the South Carolina Pollution Control Act, S.C. Code Ann. §§ 48-1-10 *et seq.*, by allowing contaminated water from the ash ponds at

SCE&G's Wateree Station to enter the environment without a permit, and SCE&G has denied the allegation; and

C. WHEREAS, Riverkeeper and SCE&G desire to enter into this Agreement in order to settle the Action; and

D. WHEREAS, Riverkeeper and SCE&G intend for these Recitals to be a part of their binding agreement and to be incorporated into this Agreement.

NOW THEREFORE, the parties to this Agreement agree as follows:

1. Undertakings by SCE&G: In consideration of the promises contained herein, the adequacy of which are hereby acknowledged, SC&EG agrees to implement the following actions at the coal-fired power plant known as Wateree Station in Richland County, South Carolina:

    1.1 By December 31, 2012, install equipment for dry bottom ash handling, with equipment fully operational by June 1, 2013. SCE&G will cease to deposit bottom ash into the Ponds at the Wateree Station by June 1, 2015, and instead shall either sell or recycle bottom ash or place it in a Class 3 (or better) landfill.

    1.2 Continue to remove ash from Pond 1 for sale, recycling or placement in a Class 3 (or better) landfill, with the net reduction of ash in Pond 1 of at least 240,000 tons during the period from January 1, 2012 to January 1, 2015.

    1.3 By November 2, 2013, apply for any necessary approvals or permit(s) for development of the on-site Class 3 landfill to accommodate removal of all ash from Pond 1 by December 31, 2020.

1.4 Within 20 months of issuance of final permits or approvals described in paragraph 1.3, develop the on-site Class 3 landfill to accommodate the coal ash removed from Pond 1 and ash generated by the Wateree Station.

1.5 By December 31, 2017, remove emergency ash sluice piping and cease depositing any coal ash into the Ponds at the Wateree Station.

1.6 By December 31, 2015, apply to DHEC for a permit to construct a new synthetically lined wastewater pond to replace Pond 1 and for any permits or approvals necessary to close the existing Pond 1. The replacement Pond 1 shall meet applicable DHEC regulations for wastewater treatment ponds, and the synthetic liner will include best engineering QA/QC protocols during construction to verify that the liner is free of manufacturing and installation defects.

1.7 Within two years after issuance of the final permit(s) described in paragraph 1.6, construct a new synthetically lined wastewater pond to replace Pond 1 and proceed to close Pond 1. The replacement Pond 1 shall meet applicable DHEC regulations for wastewater treatment ponds, and the synthetic liner will include best engineering QA/QC protocols during construction to verify that the liner is free of manufacturing and installation defects.

1.8 By December 31, 2020, complete removal of ash and an additional two feet (minimum) of underlying soil from existing Pond 1, and further soil removal if necessary as follows: The parties understand and agree that such removal will result in soil arsenic concentrations averaging no higher than 10 parts per million at each of 30 or more sample locations systematically selected within existing Pond 1 and sampled at approximately two-foot intervals above the clay layer.

1.9 On a semi-annual basis, provide a status report to Riverkeeper that states (1) the amount of ash removed during the six-month period; (2) the results of groundwater sampling for wells monitored pursuant to the Mixing Zone Consent Agreement; and (3) the activities performed during the six-month period in furtherance of the Undertakings described in this Paragraph 1. Reports for the period from January 1 through June 30 of each year shall be provided by July 31; and reports for the period from July 1 through December 31 shall be provided by January 31 of the following year.

2. <u>RELEASE AND DISCHARGE BY RIVERKEEPER</u>:

2.1 <u>Consideration</u>: In consideration of the Undertakings by SCE&G set forth in Paragraph 1, Riverkeeper, on behalf of itself and its successors, predecessors, assigns, affiliates, parent companies, subsidiaries, officers, directors, agents, and employees, hereby completely releases and forever discharges SCE&G from all past, present, and future claims, demands, obligations, actions, and causes of action, whether now known or unknown, including, but not limited to, claims for injunctive relief, personal injury, property damage, economic loss or expense, attorneys' fees, penalties, sanctions, and consequential damages of any nature whatsoever, whether based on statute, tort, subrogation, contract, quasi-contract, or any other theory of recovery or responsibility, for the claims set out in the Complaint; for any alleged contamination of groundwater at Wateree Station; for any allegation relating to migration or movement of that groundwater into the Wateree River, into wetlands, or under other properties; and for management of coal ash in compliance with this Agreement or other actions to expedite removal of coal ash from the Ponds (collectively, the "Released Claims"). Riverkeeper shall not submit comments to a regulatory agency concerning, or legally or administratively contest, the provisions of any permit or approval that deals with the contamination of groundwater at Wateree Station, the migration or movement of that groundwater into the Wateree River, into wetlands, or under other properties, or the management of coal ash in compliance with this Agreement or other actions to expedite removal of coal ash from the Ponds. Except as to the Released Claims, nothing in this Agreement affects or releases the rights of the Riverkeeper to comment upon and contest, through administrative or judicial proceedings or otherwise, any permit or permit renewal issued to SCE&G; or affects or releases the rights of the Riverkeeper with respect to any violation by SCE&G of any NPDES or other permit; or releases or affects the rights of the Riverkeeper with respect to any discharge by SCE&G into the environment. Specifically, nothing in this Agreement affects or releases the rights of the Riverkeeper with respect to any unpermitted discharge (other than a discharge of groundwater) flowing on or above the surface of the ground to the Wateree River or permit violations with respect to any such discharge to the Wateree River. Nothing in this Agreement precludes the Riverkeeper from reporting seeps from the Wateree Station to the Wateree River, whether a discharge of groundwater or otherwise, solely to SCE&G, the South Carolina Department of Health and Environmental Control, and/or the U.S. Environmental Protection Agency.

2.2 Change of Law or Facts: Riverkeeper expressly acknowledges that other, new, or supplemental information or causes of action that either may now exist or that may arise or become known in the future could cause it to evaluate the underlying facts or its position in the Action differently than it has been evaluated as of the date of this Agreement. Riverkeeper expressly agrees, and specifically assumes the risk, that if facts with respect to the matters covered by this Agreement are found hereafter to be other than, in addition to, or different from, the facts now believed or assumed to be true by either or all parties, this Agreement shall nonetheless remain in full force and effect.

2.3 Released Parties: This release and discharge by Riverkeeper shall apply to and inure to the benefit of SCE&G, its past, present, and future officers, directors, agents, servants, representatives, employees, shareholders, subsidiaries, insurers, affiliates, partners, predecessors and successors in interest, and assigns.

3. ADEQUATE CONSIDERATION – DENIAL OF LIABILITY: Riverkeeper agrees and acknowledges that the Undertakings by SCE&G set forth in Paragraph 1 of this Agreement will be made in full, complete, final, and binding compromise and satisfaction of its claims as set out in Paragraph 2 above; that SCE&G's performance of the Undertakings is not and shall not be considered an admission by SCE&G of, and SCE&G specifically denies any liability for, the allegations of the Complaint; and that no past or present violation of law on the part of SCE&G shall be implied by such Undertakings. Furthermore, this is a settlement that, pursuant to Rule 408 of the Federal Rules of Evidence, is inadmissible against SCE&G in any other court proceeding, except in a proceeding to enforce this Agreement

4. ATTORNEYS' FEES, COSTS, AND LIENS: The parties to this Agreement represent and warrant that all legal expenses, bills, costs, or fees resulting from or arising out of the representation by any attorney in

relation to the Action are the responsibility of the party that retained the attorney, and that any liens based on legal expenses, bills, costs, or fees incurred as a result of the Action will be satisfied by each party who retained its counsel. The parties agree that they will indemnify, defend, and hold the other party harmless from any such claims.

5. DISMISSAL WITH PREJUDICE: Riverkeeper and SCE&G shall file with the Court a stipulation of dismissal with prejudice of the Action, each party to bear its own costs.

6. ACKNOWLEDGMENT THAT AGREEMENT WAS NOT DRAFTED BY ONE PARTY: The parties agree that no one party drafted this Agreement, that the Agreement is the result of negotiation and a mutual decision between the parties, and that it is not to be interpreted against either party.

7. WARRANTY OF CAPACITY TO ENTER INTO AGREEMENT AND EXECUTE RELEASE: The parties represent that they have the legal capacity to enter into this Agreement, and that this Agreement is not for the benefit of any party other than those who have entered into this Agreement, and gives no rights or remedies to any third parties.

8. ENTIRE AGREEMENT AND SUCCESSORS IN INTEREST: This Agreement contains the entire understanding and agreement between the parties to this Agreement with respect to the matters referred to herein. No other representations, covenants, undertakings, or other prior or contemporaneous agreements, oral or written, respecting such matters, which are not specifically incorporated herein, shall be deemed in any way

to exist or to bind either of the parties to this Agreement. The parties to this Agreement acknowledge that all terms of this Agreement are contractual and not merely a recital.

9. <u>MODIFICATION BY WRITING ONLY</u>: The parties agree that this Agreement may be modified only by a writing signed by both parties to this Agreement and that any oral agreements are not binding until reduced to writing and signed by the parties to this Agreement.

10. <u>FORCE MAJEURE</u>: The deadlines set forth in Paragraph 1 shall be extended by an event of *force majeure*, which shall mean any event arising from causes beyond the control of SCE&G that causes a delay in or prevents the performance of an Undertaking, including, but not limited to: (a) acts of God, fire, war, insurrection, civil disturbance, labor disputes, labor or material shortages, or explosion; (b) adverse weather condition that could not be reasonably anticipated causing unusual delay in transportation and/or field work activities; (c) restraint by court order or order of public authority; and (d) inability to obtain any necessary authorizations, approvals, permits, or licenses. SCE&G shall promptly, and no later than the next semi-annual status update, inform Riverkeeper if an event of *force majeure* has occurred.

11. <u>AUTHORITY OF DHEC UNAFFECTED</u>: The parties acknowledge that several of the Undertakings set forth in Paragraph 1 require approvals and/or permits from DHEC. SCE&G agrees to apply timely and completely (as determined by DHEC) for any required approvals and/or

permits and to cooperate with DHEC to provide such information as may be reasonably requested by DHEC to issue the approvals and/or permits. Riverkeeper acknowledges that if SCE&G has exercised appropriate efforts to submit a timely and complete (as determined by DHEC) application or request for approval to DHEC, then any delay, failure, or refusal to issue required approvals and/or permits by DHEC shall be considered *force majeure*.

12. TERMINATION: This Agreement shall terminate upon completion by SCE&G of the undertakings set out in Paragraph 1. If, prior to that time and in violation of this Agreement, Riverkeeper submits comments to a regulatory agency concerning, or legally or administratively contests, the provisions of any permit or approval that deals with the contamination of groundwater at Wateree Station, the migration or movement of that groundwater into the Wateree River, into wetlands, or under other properties, or the management of coal ash in compliance with this Agreement or other actions to expedite removal of coal ash from the Ponds, then SCE&G shall have the right, but not the obligation, to terminate this Agreement. If SCE&G fails to carry out any of the Undertakings in Paragraph 1 in compliance with this Agreement, then Riverkeeper shall have the right, but not the obligation, to terminate this Agreement. If either party decides to terminate this Agreement, then it shall give the other party written notice of the basis for its termination. Notice of termination shall be sent in accordance with Paragraph 16.

Unless withdrawn by the terminating party or invalidated by a court of law, the termination shall become effective 15 days after receipt of the notice of termination. Riverkeeper may make comments to any government agency concerning and may take action with respect to or contest any unpermitted discharge (other than a discharge of groundwater) flowing on or above the surface of the ground to the Wateree River, and any comments, contests, or other actions taken by Riverkeeper concerning any such discharge shall not be a basis for termination of this Agreement. Nothing in this Agreement precludes the Riverkeeper from reporting seeps from the Wateree Station to the Wateree River, whether a discharge of groundwater or otherwise, solely to SCE&G, the South Carolina Department of Health and Environmental Control, and/or the U.S. Environmental Protection Agency; and any such report, but only such report, by Riverkeeper shall not be a basis for termination of this Agreement.

13. BINDING UPON SUCCESSORS AND ASSIGNS: The parties to this Agreement agree that this Agreement is binding upon the parties' successors and assigns.

14. SEVERABILITY: The parties agree that if any provision of this Agreement should become inconsistent with present or future law governing the subject matter of the provision, such provision shall be deemed to be rescinded or modified in accordance with any such law. In all other

respects, the parties to this Agreement agree that the other provisions of this Agreement shall continue and remain in full force and effect.

15. EXECUTION IN COUNTERPARTS: This Agreement may be executed in multiple counterparts, each of which shall be deemed an original Agreement, and all of which shall constitute one agreement to be effective as of the Effective Date. Photocopies or facsimile copies of executed copies of this Agreement may be treated as originals. A duly authorized attorney may sign on behalf of a corporate entity.

16. NOTICE TO PARTIES: Notices required or authorized to be given pursuant to this Agreement shall be sent to the persons at the addresses set out below. Notices are effective upon receipt. Semiannual status reports may be sent by e-mail. All other notices may be delivered in person or sent by U.S. Mail or an overnight delivery service. Either party may change the persons and/or addresses for notice by providing notice to the representative(s) of the other party set out below.

For the Riverkeeper:

Executive Director
Catawba Riverkeeper Foundation
421 Minuet Lane, Suite 205
Charlotte, North Carolina 28217
rick@catawbariverkeeper.org

With a copy to:

Frank S. Holleman III, Esq.
Southern Environmental Law Center
601 W. Rosemary Street, Suite 220
Chapel Hill, North Carolina 27516
fholleman@selcnc.org

For SCE&G:

J. Hagood Hamilton, Jr., Esq.
Assistant General Counsel
SCANA Corporation
220 Operation Way, MC-C222
Cayce, South Carolina 29033-3107
jhamilton@scana.com

17. GOVERNING LAW: This Agreement shall be construed and interpreted in accordance with the laws of the State of South Carolina.

18. EFFECTIVE DATE: This Agreement shall become effective immediately following execution by both of the parties listed below.

[signatures on following pages]

SOUTH CAROLINA ELECTRIC & GAS
COMPANY

BY: ______________________________
James M. Landreth

ITS: Vice President
Fossil Hydro Operations

CATAWBA RIVERKEEPER FOUNDATION, INC.

BY: ______________________________
Richard C. Gaskins, Jr.

ITS: Executive Director

Electronic Filing - Received, Clerk's Office : 07/17/2014

Illinois Pollution Control Board
R2014-10

T. Barkley: Exhibit Q

Sign in with Facebook Or use your Businessweek account
Email PasswordForgot password?
☐ Remember me Sign In

Already a Bloomberg.com user?

Sign in with the same account.

Don't have an account? Sign up.

Help! I can't access my account.

Bloomberg Businessweek

News

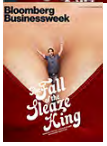

Search
Like 585k Follow @BW

- Global Economics
  - 

    U.S. Sanctions Finally Hit Russia Where It Counts

    U.S. to Russia: Do your banking someplace else
  - **Global Economics**
    - **Why More of Israel's Iron Dome Will Be Made in the U.S.**
    - **Ukraine Girds for Another Battle: Fixing Its Sick Economy**
    - **Cambodia's Political Turmoil Deepens With Violent Clashes and Arrests of Opposition Leaders**
    - **Next Financial Crisis Case: Bank of America**
  - **Recent**
    - **Will China's Reforms Stall over Growth Concerns?**
    - **How Russian Hackers Stole the Nasdaq**
    - **Why China's Love of *Transformers* Won't Easily Translate Into Toy Sales**
    - **A Microsoft Alum Is Now Ukraine's Chief Reformer**

    - **With Tensions Rising, Japanese Investment in China Plummets**
  - **Sections**
    - China
    - Energy
    - Europe
    - Global Economics
    - Housing
    - India
    - Jobs
    - U.S. Economy
    - Blog: Econochat
- Companies & Industries

In a Fox-Time Warner Merger, Who Would Get CNN?

No way would regulators allow Rupert Murdoch to own two cable news networks, which raises the obvious question

- **Companies & Industries**
  - **Amazon Is Testing Unlimited Kindle Books**
  - **Murdoch's Time Warner Bid Makes Waves for Media Stocks**
  - **Need a Military Jet on Budget? Try the Textron Scorpion for $20 Million**
  - **Why China's Love of *Transformers* Won't Easily Translate Into Toy Sales**
- **Recent**
  - **How Russian Hackers Stole the Nasdaq**
  - **Pitbull: Get Rich or Die Shilling**
  - **Soccer Cleats Try the Sneaker Scarcity Game**
  - **Ten Thousand Hours of Practice? Don't Waste Your Time**
  - **Leaving a Kid Alone in a Park Is Actually Pretty Safe**
- **Sections**
  - The Success Issue 2014
  - Autos
  - Sports
  - Company Research
  - Energy
  - Executive Research
  - Health Care
  - Job Search
  - Manufacturing
  - Marketing
  - Telecommunications
  - Transportation
  - Blog: The Management Blog

Electronic Filing - Received, Clerk's Office : 07/17/2014

- Politics & Policy
    - 

      [A Navy Nurse Is Refusing to Force-Feed a Guantanamo Inmate]

      First-of-a-kind conscientious objector's stance follows 18 months of hunger strikes by detainees
    - **Politics & Policy**
        - **A Navy Nurse Is Refusing to Force-Feed a Guantanamo Inmate**
        - **U.S. Sanctions Finally Hit Russia Where It Counts**
        - **Behind CDC's Anthrax Lapse, an 'Insufficient Culture of Safety'**
        - **Need a Military Jet on Budget? Try the Textron Scorpion for $20 Million**
    - **Recent**
        - **How Russian Hackers Stole the Nasdaq**
        - **Why More of Israel's Iron Dome Will Be Made in the U.S.**
        - **Ukraine Girds for Another Battle: Fixing Its Sick Economy**
        - **Cambodia's Political Turmoil Deepens With Violent Clashes and Arrests of Opposition Leaders**
        - **A Microsoft Alum Is Now Ukraine's Chief Reformer**
    - **Sections**
        - Congress
        - Courts
        - Legislation
        - White House
        - Blog: Josh Green on Politics
- Technology
    - 

      Amazon Is Testing Unlimited Kindle Books

      Amazon is testing an e-book subscription service, and Penguin Random House might end up its biggest rival
    - **Technology**
        - **Airbnb Goes Emo With Its Rebranding Love Story**

- Buying Time Warner to Get HBO's Money-Making Machine
- Apple Partners With the Company Formerly Known as Big Brother
- Yahoo! Keeps Winning With Alibaba (and Losing Everywhere Else)

- **Recent**
  - How Russian Hackers Stole the Nasdaq
  - Pitbull: Get Rich or Die Shilling
  - Ten Thousand Hours of Practice? Don't Waste Your Time
  - The Excessively Networked VC Behind SherpaVentures
  - In a Fox-Time Warner Merger, Who Would Get CNN?
- **Sections**
  - Global Tech Issue 2014
  - Apple
  - Apps & Software
  - Enterprise Tech
  - Consumer Electronics
  - Facebook
  - Google
  - Mobile & Telecom
  - Personal Technology
  - Science & Research
  - Social Media

- Markets & Finance

How Russian Hackers Stole the Nasdaq

A hack reveals how vulnerable the U.S. is to cyber attacks

- **Markets & Finance**
  - U.S. Sanctions Finally Hit Russia Where It Counts
  - Next Financial Crisis Case: Bank of America
  - Six Degrees of Shervin Pishevar
  - In a Fox-Time Warner Merger, Who Would Get CNN?
- **Recent**
  - Will China's Reforms Stall over Growth Concerns?
  - Ukraine Girds for Another Battle: Fixing Its Sick Economy
  - Murdoch's Time Warner Bid Makes Waves for Media Stocks

  - [A Microsoft Alum Is Now Ukraine's Chief Reformer]
  - [With Tensions Rising, Japanese Investment in China Plummets]
- **Sections**
  - Banks
  - Commodities
  - Currencies
  - Hedge Funds
  - Investing
  - Mutual Funds & ETFs
  - Private Equity
  - Real Estate
  - Stocks & Bonds
  - Taxes
  - Wall Street

- Innovation & Design

Airbnb Goes Emo With Its Rebranding Love Story

Airbnb grew so quickly that formal branding was sidelined. Now the company is unveiling a new logo and a revamped website designed to make a more emotional appeal to users

- **Innovation & Design**
  - **GE Modernizes Moon Boots and Sells Them as Sneakers**
  - **Need a Military Jet on Budget? Try the Textron Scorpion for $20 Million**
  - **Is Dodge's New Hellcat a Screaming Deal?**
  - **University of Utah's New Dorm Mimics Google Headquarters**
- **Recent**
  - **Three Radical Changes That Can Save Business Schools From Extinction**
  - **John Wayne's Heirs Are Suing Duke University for the Right to Make 'Duke' Bourbon**
  - **A Rocket Scientist Designs a High-Performance Saucepan**
  - **Teaching Mapping Apps to Pick the Prettiest Walk Over the Shortest**
  - **Harvard vs. Oxford in a Multibillion-Dollar Cholesterol-Drug Cage Match**
- **Sections**
  - Design Issue 2014
  - Architecture
  - Copyright
  - Design
  - Fix This/Big Data
  - Innovators
  - Patents
  - Privacy

Electronic Filing - Received, Clerk's Office : 07/17/2014

- Reinventing Business
- Trademarks
- Blog: Very Near Future

- Lifestyle
    - 

      Pitbull: Get Rich or Die Shilling

      The crossover hip-hop star aims to be a billionaire

    - **Lifestyle**
        - **Soccer Cleats Try the Sneaker Scarcity Game**
        - **Ten Thousand Hours of Practice? Don't Waste Your Time**
        - **Leaving a Kid Alone in a Park Is Actually Pretty Safe**
        - **Why China's Love of *Transformers* Won't Easily Translate Into Toy Sales**
    - **Recent**
        - **Amazon Is Testing Unlimited Kindle Books**
        - **In a Fox-Time Warner Merger, Who Would Get CNN?**
        - **A Navy Nurse Is Refusing to Force-Feed a Guantanamo Inmate**
        - **Airbnb Goes Emo With Its Rebranding Love Story**
        - **GE Modernizes Moon Boots and Sells Them as Sneakers**
    - **Sections**
        - Books
        - Entertainment
        - Fashion
        - Food & Drink
        - Gadgets & Accessories
        - Hard Choices
        - Next Life
        - Sports
        - Travel
        - Workplace
- Business Schools
    - 

Let's Start Telling Young People the Whole Truth About College

High schoolers should know there are financially and intellectually rewarding careers that do not require a college degree

- **Business Schools**
  - **One University Is Building a Lavish Live/Work Dorm to Rival Google Headquarters**
  - **B-Schools Finally Acknowledge: Companies Want MBAs Who Can Code**
  - **Say It With Stick Figures: Your Crude Drawings Are More Effective Than PowerPoint**
  - **Four Years Out, the Great Recession's College Grads Fared Well—if They Picked the Right Major**
- **Recent**
  - **Ten Thousand Hours of Practice? Don't Waste Your Time**
  - **Three Radical Changes That Can Save Business Schools From Extinction**
  - **Do Your Work Early on Data Sufficiency**
  - **Factual Accuracy in the SAT Essay**
  - **Online Education Targets Saudi Arabia's Labor Problem, Starting With Women**
- **Sections**
  - European B-Schools
  - Financial Aid
  - Finding a Job
  - Forums
  - MBA Admissions
  - Rankings & Profiles
  - School Finder
  - Undergrad Programs
  - Blog: Getting In
  - Test Prep Center

- Small Business

How Chinatown Buses Survived Competition, Regulation, and the Occasional Gang War

Businesses operating cheap intercity buses have irked politicians and better-capitalized competitors, but they're not going away

- **Small Business**
  - **Typewriters May Thwart Spying, but Does Anyone Still Make Them?**
  - **Do Two-Thirds of Shark Tank Deals Fall Apart?**
  - **If the Houston Astros Win 23 More Games, This Texas Business Will Refund $4 Million**
  - **Six Degrees of Shervin Pishevar**
- **Recent**

        - **Will Funding Circle's $65 Million Help It Compete With Banks?**
        - **Bouncy Houses Are So Fun and So Dangerous**
        - **Sizing Up the Naked Recreation Business on #NationalNudeDay**
        - **Workers Finally Feel Optimistic Enough to Jump Ship. Here's How to Keep Them Aboard**
        - **A New Business Accelerator Takes on Plastic Pollution**
    - **Sections**
        - Advice
        - Benefits
        - Blog: The New Entrepreneur
        - Commentary
        - Expanding Overseas
        - Financing
        - Logistics
        - Marketing
        - Policy
        - Profiles
        - Small to Big
        - Smart Answers
        - Taxes
        - Technology
        - Toolkit
- Video & Multimedia
    - **Slideshows**
        - 

          Exfoliants for Summer Skin Care
        - 

          Desk Toys for Adults at Play in the Office
        - 

          FBI Lab Studies Terrorist Bombs
        - 

          It's Hot Out. Gross
    - **Photo Essays**

  - 

    The Infoladies of Bangladesh

  - 

    Climbing to Another Continent

- **Charts**

  - Cue Home Test Kit Tracks Fertility, Flu, Other Results

  - 

    How Major League Baseball Helps ESPN Stream World Cup Soccer

- Videos

  - 

    U.S. Jobless Claims Decline; Housing Starts Falls

  - 

    Microsoft's 18,000 Job Cuts Show Maturity: Hayzlett

  - 

    Inside the Trillion Dollar Nasdaq Hack

  - 

    Morgan Stanley Beats Estimates

AP News

SCE&G removes 280K tons of coal ash from Wateree

By By Meg Kinnard July 30, 2013

COLUMBIA, S.C. (AP) — South Carolina Electric & Gas has removed 280,000 tons of coal ash from lagoons at a river near Columbia as part of a settlement agreement, an environmental group said Tuesday.

The Southern Environmental Law Center says Tuesday the disclosure came in paperwork filed as part of a settlement over coal ash removal.

In August, SCE&G settled a lawsuit accusing the utility of illegally discharging arsenic and other contaminants into the Wateree River at its 700-megawat, coal-fired Wateree Station near Eastover, about 25 miles southeast of Columbia. The Catawba Riverkeeper Foundation sued the utility last year, saying the company was storing wet coal ash in earthen lagoons near the plant and that monitoring wells near the lagoons show five times the legal limit of arsenic.

Video: Energy Resources LLC Coal Handling & Prep Plant # 1

The lawsuit also said the ponds sometimes leak, sending "streams of arsenic-contaminated water out of the riverbank and into the Wateree River."

According to federal filings, SCE&G reported that in 2009 it disposed of more than 2.7 million pounds of toxic substances at the Wateree plant, including 3,100 pounds of compounds containing arsenic. In the lawsuit, the foundation said SCE&G "continues to operate Wateree Station without a permit for its ongoing discharges of arsenic and other contaminants from the coal ash impoundments into waters and groundwaters of the State."

As part of the settlement, SCE&G agreed to remove the 2.4 million tons of coal ash. That process is expected to be completed by the end of 2020. The foundation says SCE&G is ahead of that schedule.

Video: What to Expect From G-7 Gathering in Normandy

"We are pleased with the progress we have made to be ahead of schedule on ash removal at Wateree and continue to work the plan for complete removal by 2020," said Jim Landreth, SCE&G vice president of fossil/hydro. "SCE&G hopes to continue to demonstrate its commitment to efficiently and effectively decommission wet ash storage facilities at all of our coal-fired stations."

Several years ago, SCE&G opened a dry storage facility on site. SCE&G has denied any illegal discharge of pollutants. When the settlement was announced last year, the company said the agreement was in all parties' best interest.

The Waccamaw Riverkeeper is currently suing Santee Cooper, saying the state-owned utility has known for more than a decade that arsenic was seeping from its coal-fired power plant in Conway.

Video: Wesfarmers CEO on Strategy, Australia Economy, B20

___

Kinnard can be reached at http://twitter.com/MegKinnardAP

Story: Ukraine's Top Oligarch Walks a Fine Line
Story: Robert McDonald Is a Great Choice to Fix the VA—If Washington Doesn't Drive Him Insane

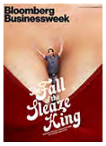

0 Comments Businessweek.com Login

Sort by Best Share Favorite

Start the discussion…

Be the first to comment.

Subscribe Add Disqus to your site

Read this next

×
Ikea Wants to Bring Swedish Meatballs to the Las Vegas Desert

Feed Most Popular

- Read
- Shared
- Discussed

- How Russian Hackers Stole the Nasdaq
- U.S. Sanctions Finally Hit Russia Where It Counts
- Let's Start Telling Young People the Whole Truth About College
- Pitbull: Get Rich or Die Shilling
- Amazon's Cloud Is One of the Fastest-Growing Software Businesses in History

- How Russian Hackers Stole the Nasdaq
- Amazon's Cloud Is One of the Fastest-Growing Software Businesses in History
- Let's Start Telling Young People the Whole Truth About College
- U.S. Sanctions Finally Hit Russia Where It Counts
- Pitbull: Get Rich or Die Shilling

- Israel's Iron Dome Is Amazing, and That's a Problem
- In Las Vegas, Climate Change Deniers Re-Group, Vow to Keep Doubt Alive [HOLD FOR ART]
- Let's Start Telling Young People the Whole Truth About College
- Inside Monsanto, America's Third-Most-Hated Company
- Elon Musk's Futuristic Spaceport Is Coming To Texas

Newsletter Signup

Sample copy
Enter Your Email I'm in

☑ Businessweek.com, on behalf of itself and select partners, may send me offers and promotions.
☐ Bloomberg, on behalf of itself and select partners, may send me offers and promotions.

Thank you for subscribing to our Daily Newsletter. You will receive a confirmation email shortly at .

Bloomberg Businessweek

- 

  Malaysia Airlines: Lost Contact With Flight MH17
- 

  How Will Putin React to Malaysian Plane Crash?
- 

  Now Is Best Time for Murdoch Time Warner Bid: Bank
- 

  Funding Circle Raises $65 Million for Peer-to-Peer Small Business Loans

- 

  [Will China's Reforms Stall over Growth Concerns?]

- 

  [How Russian Hackers Stole the Nasdaq]

- 

  [Pitbull: Get Rich or Die Shilling]

- 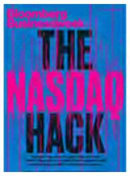

  Cover Trail: The Nasdaq Hack

- 

  [How Chinatown Buses Survived Competition, Regulation, and the Occasional Gang War]

- 

  [Soccer Cleats Try the Sneaker Scarcity Game]

Social

- Follow us on Twitter
- Join us on Facebook
- Connect with us on LinkedIn
- Connect with us on Google+
- Subscribe to Bloomberg Businessweek
- Bloomberg

Links

- Our Company
- News Mission
- Advertising
- Careers
- Content Licensing
- Feedback
- Custom Publishing
- Manage Subscription

- Mobile
- Newsletters
- Privacy Policy
- Reprints & Permissions
- Sitemap
- Terms of Use
- [+] Rate This Page
- Sponsor Content Terms

Get Businessweek Delivered

American Apparel's Future

Subscribe

Continue to Businessweek

Activate to launch comment card